E75228

Push-in L-fitting for pneumatic connections

AirBox push-in L-connect 10pcs

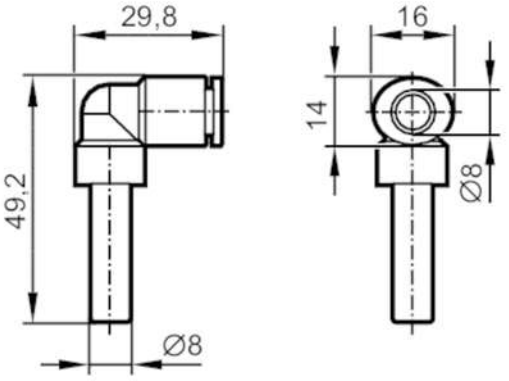

Application		
Media		compressed air according to ISO 8573-1: 2001
Operating conditions		
Operating pressure	[bar]	10; (min. -0,95)
Ambient temperature	[°C]	-20...80
Mechanical data		
Weight	[g]	69.5
Materials		housing: nickel-plated brass / PA66; release ring: polyoxymethylene; Tooth lock washer: stainless steel; form ring: NBR
Tube fittings		8 mm
Sleeve diameter	[mm]	8
Remarks		
Pack quantity		10 pcs.