R2E220-RA38-01

AC centrifugal fan - RadiCal

backward curved



ebm-papst Mulfingen GmbH & Co. KG
Bachmühle 2 · D-74673 Mulfingen
Phone +49 7938 81-0
Fax +49 7938 81-110
info1@de.ebmpapst.com
www.ebmpapst.com

Limited partnership · Headquarters Mulfingen
County court Stuttgart · HRA 590344

General partner Elektrobau Mulfingen GmbH · Headquarters Mulfingen
County court Stuttgart · HRB 590142

Nominal data

Type	**R2E220-RA38-01**		
Motor	**M2E068-BF**		
Phase		1~	1~
Nominal voltage	VAC	230	230
Frequency	Hz	50	60
Type of data definition		ml	ml
Valid for approval / standard		CE	CE
Speed (rpm)	min^{-1}	2100	2050
Power input	W	88	107
Current draw	A	0.39	0.47
Motor capacitor	µF	2	2
Capacitor voltage	VDB	450	450
Capacitor standard		S0 (CE)	S0 (CE)
Min. back pressure	Pa	0	0
Min. ambient temperature	°C	-25	-25
Max. ambient temperature	°C	50	60
Starting current	A	0.51	0.52

ml = Max. load · me = Max. efficiency · fa = Running at free air · cs = Customer specs · cu = Customer unit
Subject to alterations

AC centrifugal fan - RadiCal

backward curved

Technical features

Mass	1.28 kg
Size	220 mm
Motor size	68
Surface of rotor	Coated in black
Material of impeller	PA plastic
Number of blades	7
Direction of rotation	Clockwise, seen on rotor
Type of protection	IP44; Depending on installation and position as per EN 60034-5
Insulation class	"F"
Humidity (F) / environmental protection class (H)	H1
Max. permissible ambient motor temp. (transp./ storage)	+ 80 °C
Min. permissible ambient motor temp. (transp./storage)	- 40 °C
Mounting position	Shaft horizontal or rotor on bottom; rotor on top on request
Condensation drainage holes	Rotor-side
Operation mode	S1
Motor bearing	Ball bearing
Touch current acc. IEC 60990 (measuring network Fig. 4, TN system)	< 0.75 mA
Motor protection	Thermal overload protector (TOP) wired internally
Cable exit	Variable
Protection class	I (if protective earth is connected by customer)
Product conforming to standard	EN 60335-1; CE
Standard conformity	UKCA
Approval	VDE; CCC; EAC

ebm-papst Mulfingen GmbH & Co. KG · Bachmühle 2 · D-74673 Mulfingen · Phone +49 (0) 7938 81-0 · Fax +49 (0) 7938 81-110 · info1@de.ebmpapst.com · www.ebmpapst.com

AC centrifugal fan - RadiCal

backward curved

Product drawing

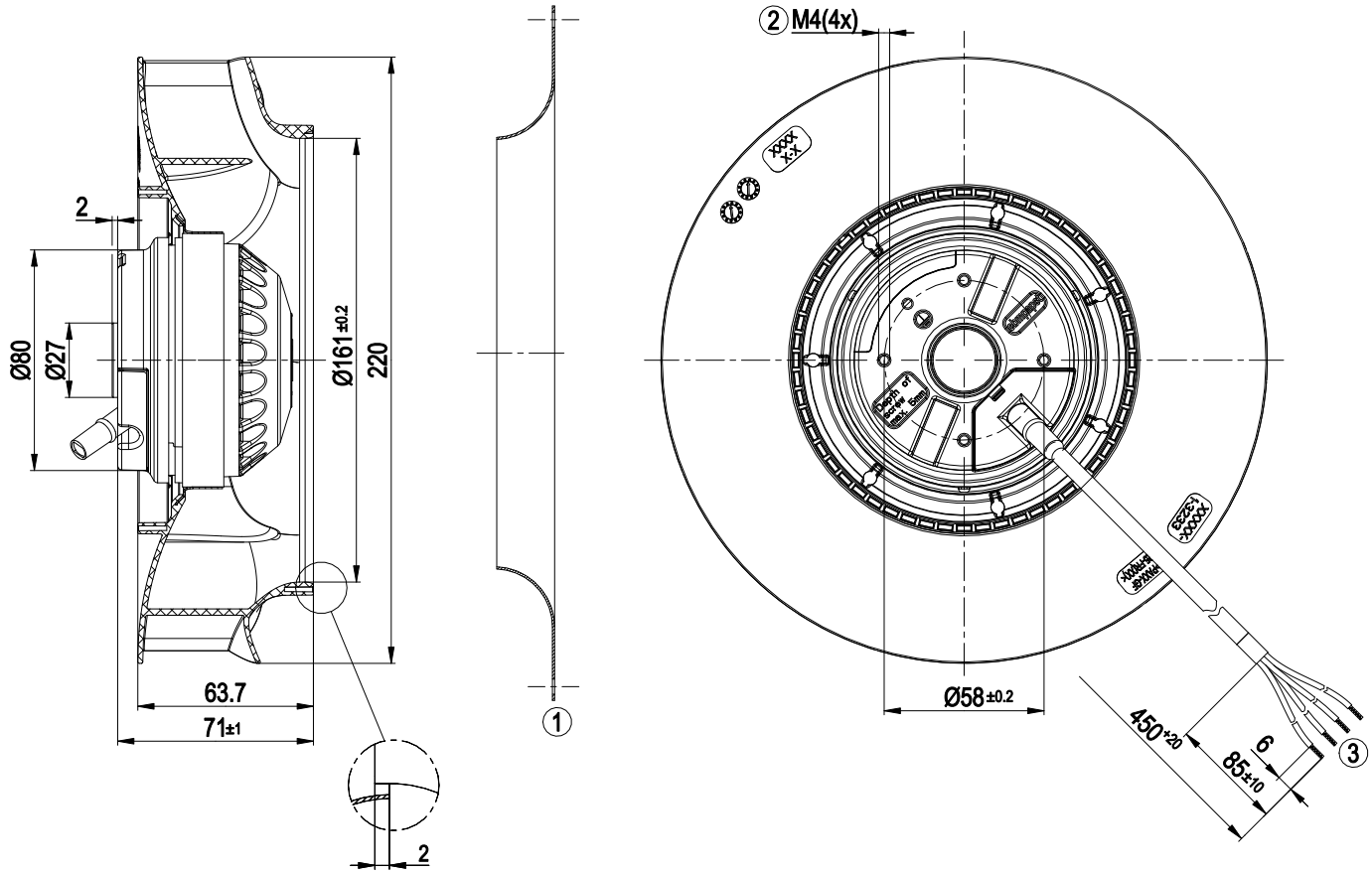

1	Accessory part: Inlet nozzle 09609-2-4013 not included in scope of delivery
2	Thread reach max. 5 mm
3	Connection line silicone 4G 0.5 mm², 4x lead tips crimped

ebm-papst Mulfingen GmbH & Co. KG · Bachmühle 2 · D-74673 Mulfingen · Phone +49 (0) 7938 81-0 · Fax +49 (0) 7938 81-110 · info1@de.ebmpapst.com · www.ebmpapst.com

AC centrifugal fan - RadiCal

backward curved

Accessory part

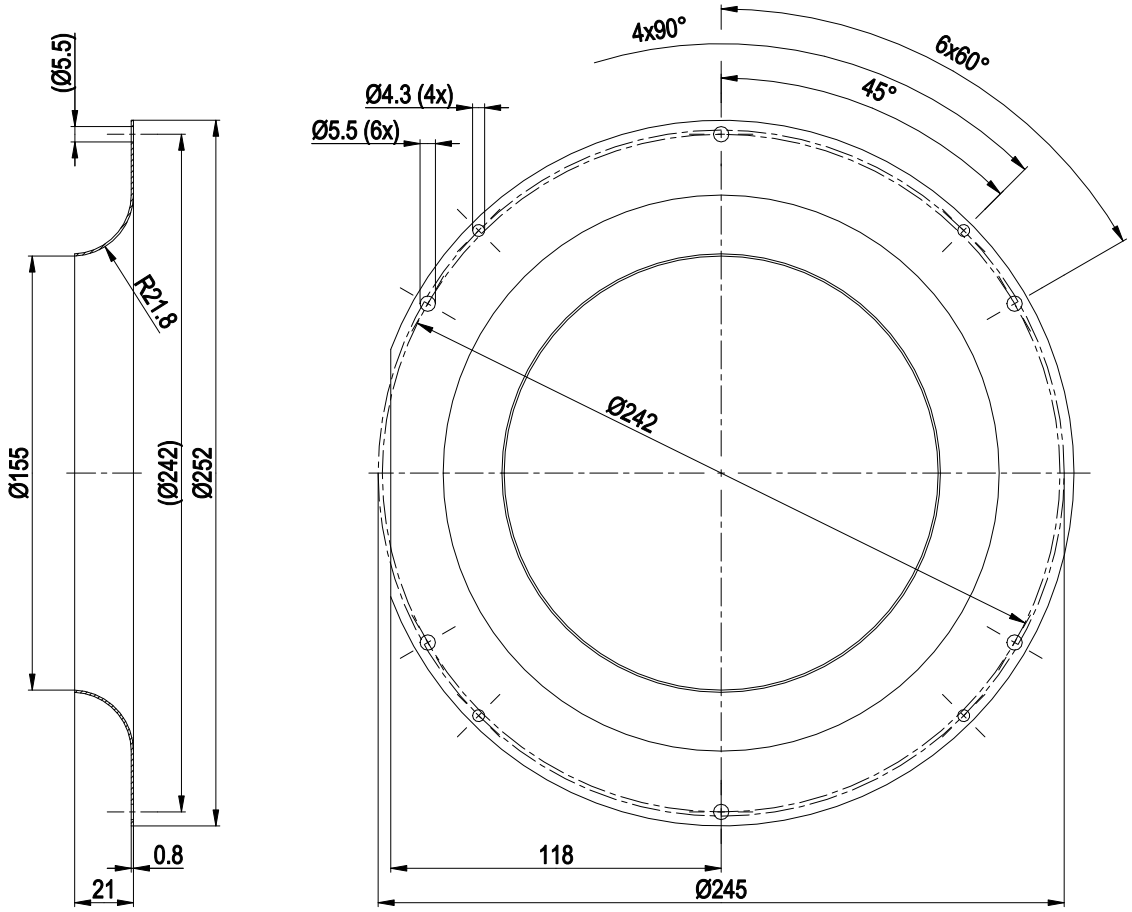

	Inlet nozzle 09609-2-4013 not included in scope of delivery

Connection screen

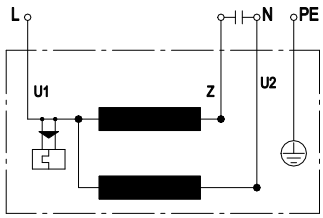

U1	blue	Z	brown	U2	black
PE	green/yellow				

ebm-papst Mulfingen GmbH & Co. KG · Bachmühle 2 · D-74673 Mulfingen · Phone +49 (0) 7938 81-0 · Fax +49 (0) 7938 81-110 · info1@de.ebmpapst.com · www.ebmpapst.com

AC centrifugal fan - RadiCal

backward curved

Charts: Air flow 50 Hz

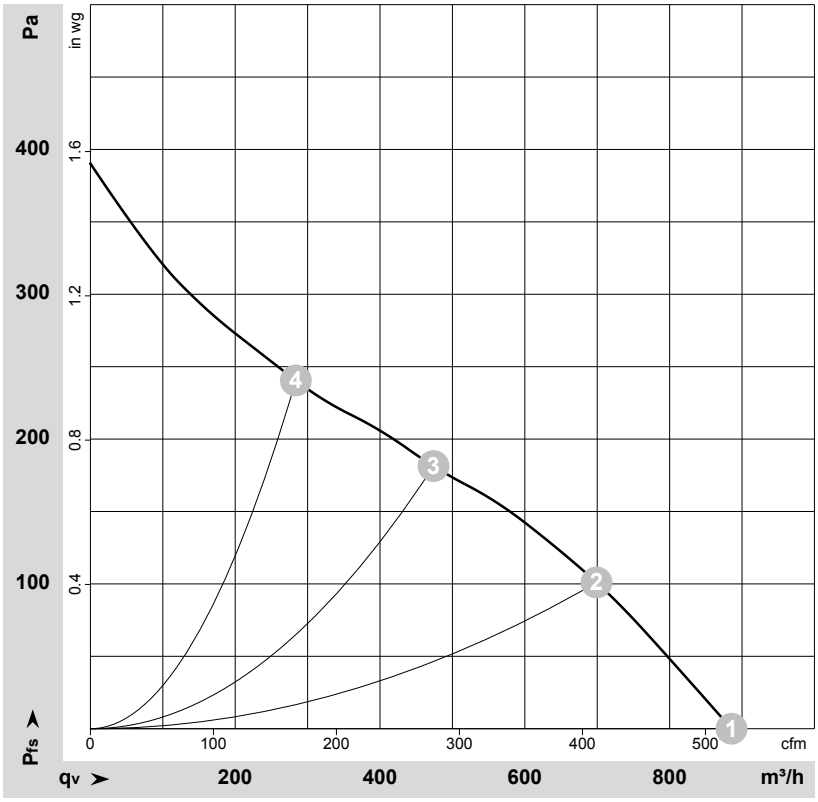

ρ = 1.15 kg/m³ ± 2 %

Measurement: LU-130008-1

Air performance measured as per ISO 5801 Installation category A. For detailed information on the measuring set-up, please contact ebm-papst. Suction-side noise levels: LwA measured as per ISO 13347 / LpA measured with 1m distance to fan axis. The values given are valid under the measuring conditions mentioned above and may vary according to the actual installation situation. With any deviation from the standard set-up, the specific values have to be checked and reviewed with the unit installed.

Measured values

	U	f	n	P_e	I	LpA_{in}	LwA_{in}	q_V	p_{fs}	q_V	p_{fs}
	V	Hz	min^{-1}	W	A	dB(A)	dB(A)	m^3/h	Pa	cfm	in. wg
1	230	50	2350	80	0.36	59	68	885	0	520	0.00
2	230	50	2230	86	0.38	54	62	700	100	410	0.40
3	230	50	2100	88	0.39	52	60	475	180	280	0.72
4	230	50	2205	86	0.38	55	64	285	240	165	0.96

U = Supply voltage · f = Frequency · n = Speed (rpm) · P_e = Power input · I = Current draw · LpA_{in} = Sound pressure level inlet side · LwA_{in} = Sound power level inlet side · q_V = Air flow
p_{fs} = Pressure increase

ebm-papst Mulfingen GmbH & Co. KG · Bachmühle 2 · D-74673 Mulfingen · Phone +49 (0) 7938 81-0 · Fax +49 (0) 7938 81-110 · info1@de.ebmpapst.com · www.ebmpapst.com

AC centrifugal fan - RadiCal

backward curved

Charts: Air flow 60 Hz

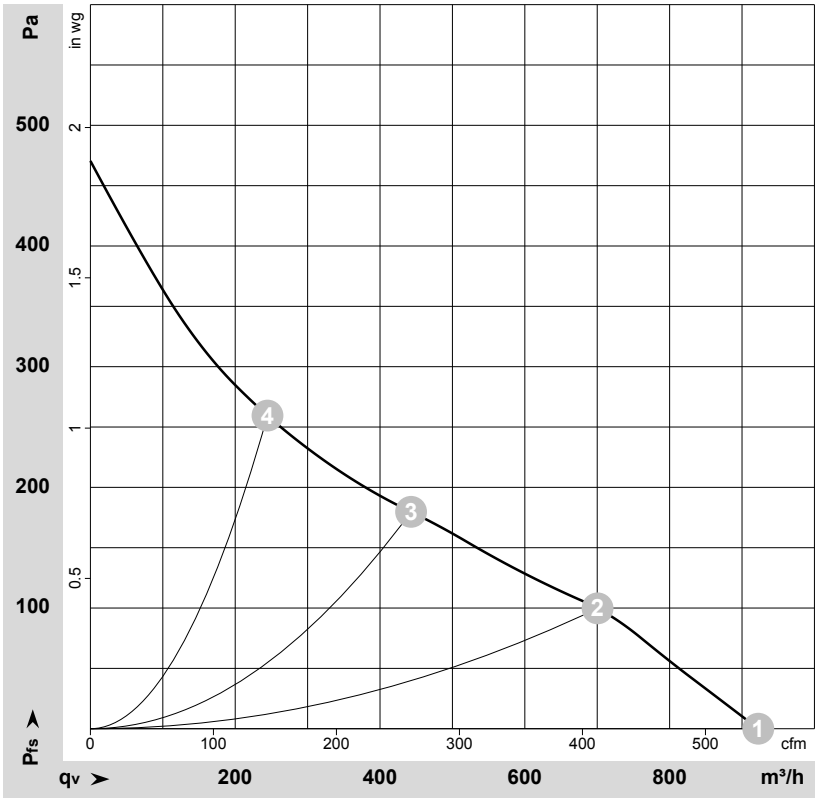

ρ = 1.15 kg/m³ ± 2 %

Measurement: LU-130009-1

Air performance measured as per ISO 5801 Installation category A. For detailed information on the measuring set-up, please contact ebm-papst. Suction-side noise levels: LwA measured as per ISO 13347 / LpA measured with 1m distance to fan axis. The values given are valid under the measuring conditions mentioned above and may vary according to the actual installation situation. With any deviation from the standard set-up, the specific values have to be checked and reviewed with the unit installed.

Measured values

	U	f	n	P_e	I	LpA_{in}	LwA_{in}	q_V	p_{fs}	q_V	p_{fs}
	V	Hz	min^{-1}	W	A	dB(A)	dB(A)	m^3/h	Pa	cfm	in. wg
1	230	60	2450	102	0.46	60	69	920	0	545	0.00
2	230	60	2210	106	0.46	54	62	700	100	410	0.40
3	230	60	2050	107	0.47	51	60	445	180	260	0.72
4	230	60	2235	105	0.45	56	65	245	260	145	1.04

U = Supply voltage · f = Frequency · n = Speed (rpm) · P_e = Power input · I = Current draw · LpA_{in} = Sound pressure level inlet side · LwA_{in} = Sound power level inlet side · q_V = Air flow
p_{fs} = Pressure increase

ebm-papst Mulfingen GmbH & Co. KG · Bachmühle 2 · D-74673 Mulfingen · Phone +49 (0) 7938 81-0 · Fax +49 (0) 7938 81-110 · info1@de.ebmpapst.com · www.ebmpapst.com