RAFIX 22 FS+, compact emergency stop, illuminated, reset by rotating, Mushroom head red, illuminable



fields of application

- Measurement-control-regulation
- Electrical engineering
- Mechanical and system engineering
- Vehicle construction
- Handheld terminals
- Industrial robots

special features

- Emergency stop with compact design
- Low installation depth 9.2 mm (PCB) or 27 mm (QC)
- Connection types: printed circuit board connection (PCB) or plug-in connection (QC)
- PCB switching elements minimize mounting errors
- Switching elements with silver contacts (max. 250 V/4 A) or gold contacts (max. 35 V/100 mA)

description

RAFIX control devices are defined at RAFI as modular elements, consisting of an actuating element, if necessary a coupling and an individual contact or lighting unit.

Actuating elements (such as pushbuttons, emergency stop actuators, etc.) have the intended tactility, reset and function only when assembled with the appropriate switching elements.

The emergency stop buttons correspond to IEC 60 947 and VDE 0113 Part 1. Thanks to a forcibly actuated mechanical motion sequence, they are dupe-proof in accordance with DIN EN ISO 13850. In order to prevent unintentional actuation, a tactile feedback must be overcome. The key switch locks into the pressed position.
The design of the actuator protects the emergency stop button from interlocking. This means that an initiated emergency stop procedure cannot be interrupted by jamming objects.

Only use with the emergency stop switching element.

With the illuminated versions, only the arrows are illuminated.

technical data

general

Disassembly possible	no
Color of mushroom	red
Property of bezel / mushroom	opaque
Collar shape	round
Operating temperature, min.	-25 °C
Operating temperature, max.	70 °C
Storage temperature, min.	-40 °C

direct links

- RAFI eCatalog

The information in this data sheet only contains general descriptions and / or performance features, which may not apply precisely as described to the respective application, and which my change due to further product enhancements. The technical data, illustrations and other information about our products are the mere results of individual technical testing. These descriptions and other product features are only binding if they expressly agreed upon at the time of the conclusion of a binding contract. In all other cases, we reserve the right to make technical changes as well as changes of availability. Pictures and other graphic illustrations are approximations only. All product names may be trademarks or brand names of the RAFI Group or any other sub-supplier of RAFI. The use of such by any third parties for their own purposes may infringe the rights of the respective entity holding those rights.

RAFI GmbH & Co. KG

Ravensburger Str. 128-134
88276 Berg / Ravensburg
Germany
www.rafi-group.com,
info.headquarters@rafi-group.com

Storage temperature, max.	80 °C
illuminated	Yes
Packaging	Box
Packaging unit	10 pcs.
net weight	13.7 g
Operating life	50,000 cycles
B10	72,000 cycles
B10d	144,000 cycles
Degree of protection, front side, according to DIN EN 60529	IP65 IP67
UL Enclosure Type Rating front side	type 1 type 4X indoor
Environment resistance	IEC 60068-2-14 IEC 60068-2-30 IEC 60068-2-33 IEC 60068-2-78
Salt-spray resistance according to standard	IEC 60068-2-11
MOQ order	10 pcs.
RoHS compliant	Yes
REACH compliant	Yes

mounting diameters

Outside dimension, length	29.8 mm
Outside dimension, width	29.8 mm
Outside dimension, height	35 mm
Mounting hole	22.3 mm
Mounting depth	9.2 mm
Installation height	25.9 mm
Grid, min.	35 x 35 mm
Collar dimension	ø 29,8 mm

mechanical data

Actuation function	latching
Operating force, max.	100 N
Resetting	by rotating
Fixing	Threaded ring
Threaded ring torque, max.	1.2 Nm

The information in this data sheet only contains general descriptions and / or performance features, which may not apply precisely as described to the respective application, and which my change due to further product enhancements. The technical data, illustrations and other information about our products are the mere results of individual technical testing. These descriptions and other product features are only binding if they expressly agreed upon at the time of the conclusion of a binding contract. In all other cases, we reserve the right to make technical changes as well as changes of availability. Pictures and other graphic illustrations are approximations only. All product names may be trademarks or brand names of the RAFI Group or any other sub-supplier of RAFI. The use of such by any third parties for their own purposes may infringe the rights of the respective entity holding those rights.

RAFI GmbH & Co. KG

Ravensburger Str. 128-134
88276 Berg / Ravensburg
Germany
www.rafi-group.com,
info.headquarters@rafi-group.com

drawings

System drawing

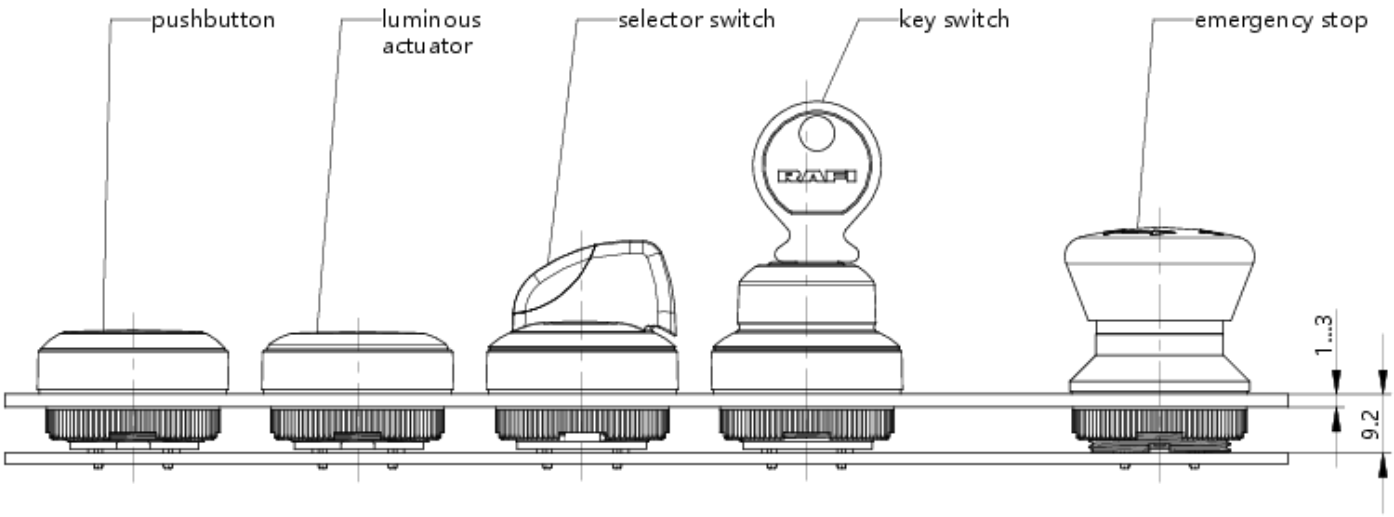

System drawing

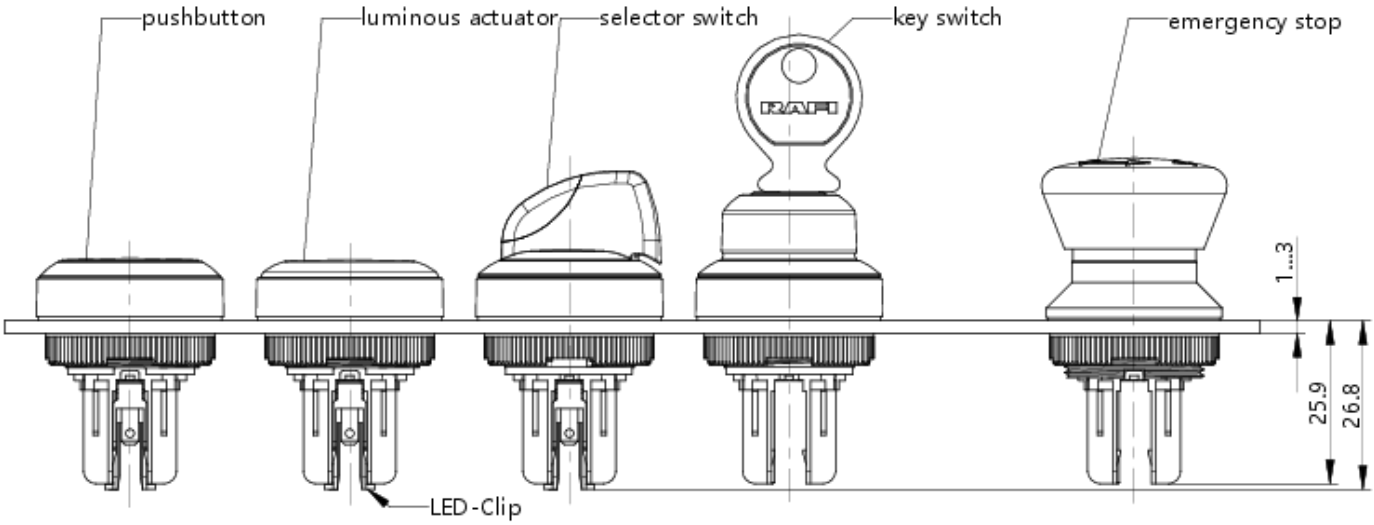

The information in this data sheet only contains general descriptions and / or performance features, which may not apply precisely as described to the respective application, and which my change due to further product enhancements. The technical data, illustrations and other information about our products are the mere results of individual technical testing. These descriptions and other product features are only binding if they expressly agreed upon at the time of the conclusion of a binding contract. In all other cases, we reserve the right to make technical changes as well as changes of availability. Pictures and other graphic illustrations are approximations only. All product names may be trademarks or brand names of the RAFI Group or any other sub-supplier of RAFI. The use of such by any third parties for their own purposes may infringe the rights of the respective entity holding those rights.

RAFI GmbH & Co. KG

Ravensburger Str. 128-134
88276 Berg / Ravensburg
Germany
www.rafi-group.com,
info.headquarters@rafi-group.com

Mounting hole drawing

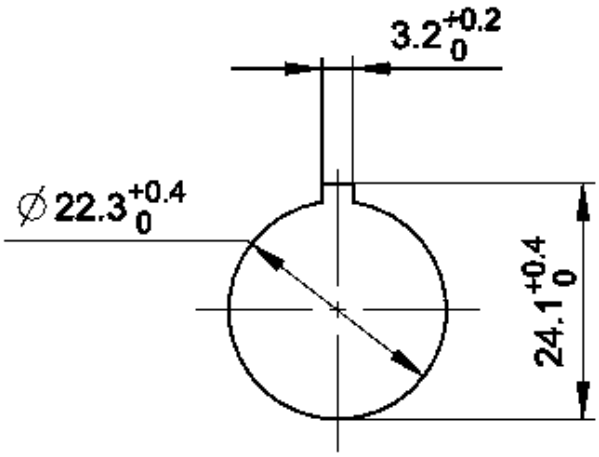

acc. to IEC 60947-5-1

front panel drawing

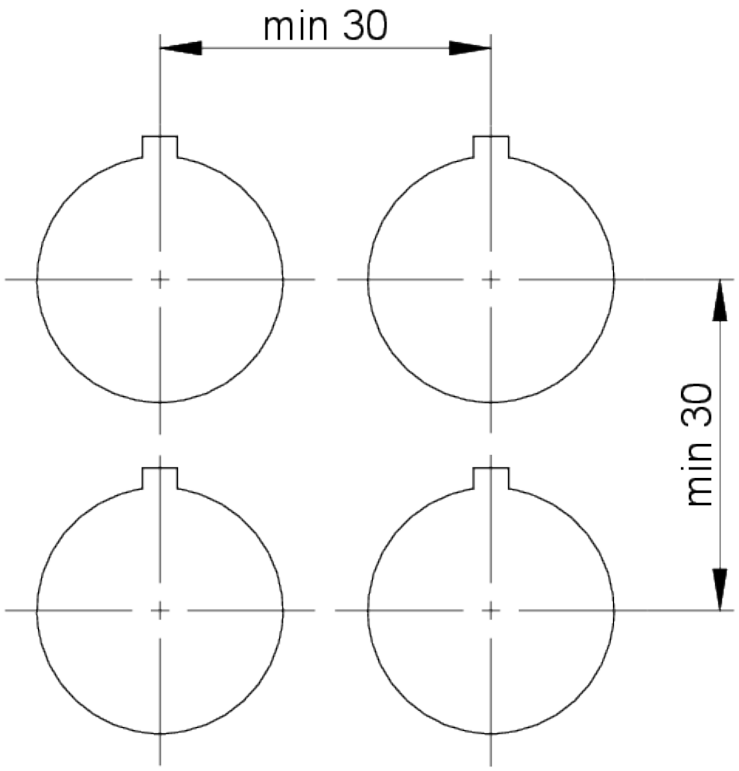

The information in this data sheet only contains general descriptions and / or performance features, which may not apply precisely as described to the respective application, and which my change due to further product enhancements. The technical data, illustrations and other information about our products are the mere results of individual technical testing. These descriptions and other product features are only binding if they expressly agreed upon at the time of the conclusion of a binding contract. In all other cases, we reserve the right to make technical changes as well as changes of availability. Pictures and other graphic illustrations are approximations only. All product names may be trademarks or brand names of the RAFI Group or any other sub-supplier of RAFI. The use of such by any third parties for their own purposes may infringe the rights of the respective entity holding those rights.

RAFI GmbH & Co. KG

Ravensburger Str. 128-134
88276 Berg / Ravensburg
Germany
www.rafi-group.com,
info.headquarters@rafi-group.com

mounting

RAFI

DEUTSCH (DE)

Betriebsanleitung
NOT-HALT-BEFEHLSGERÄTE

Baureihe
RAFIX 16, RAFIX 22 FS⁺, RAFIX 22 FSR, RAFIX 22 QR

1. Sicherheitshinweise
- Vor Inbetriebnahme bitte Betriebsanleitung sorgfältig lesen.
- Not-Halt-Befehlsgeräte erfüllen eine Personenschutz-Funktion. Unsachgemäßer Einbau, sachwidrige Anwendung oder Manipulationen können zu schweren Verletzungen von Personen führen!
- Not-Halt-Befehlsgeräte dürfen nicht umgangen, entfernt oder auf andere Weise unwirksam gemacht werden!
- Vor Beginn der Installation Anlage und Gerät spannungsfrei schalten!
- Vor Erst-Inbetriebnahme der Maschine oder Anlage Not-Halt-Befehlsgerät durch Testbetätigung auf korrekte Montage und Funktion überprüfen.
- Not-Halt-Befehlsgeräte mit sichtbaren Beschädigungen sind unverzüglich auszutauschen.
- Not-Halt-Funktion darf nicht als Ersatz für Schutzmaßnahmen oder andere Sicherheitsfunktionen verwendet werden.
- Not-Halt-Funktion darf die Wirksamkeit von Schutzreinrichtungen oder von Einrichtungen mit anderen Sicherheitsfunktionen nicht beeinträchtigen.

2. Allgemeine Beschreibung und bestimmungsgemäße Verwendung
Not-Halt-Befehlsgeräte sind elektromechanische Schaltgeräte zum Schutz von Personen. Sie dienen der schnellen Abschaltung um Maschinen, Fahrzeuge und Anlagen in einen sicheren Zustand zu bringen, um Gefahren und Schäden für Mensch und Maschine zu vermeiden oder zu verringern.
Für die Inbetriebnahme, den Einsatz und technischen Überprüfungen gelten im speziellen folgende Vorschriften:
- Die Maschinenrichtlinie 2006/42/EG
- Die Sicherheitsvorschriften sowie
- Die Unfallverhütungsvorschriften / Sicherheitsregeln

Hersteller und Benutzer von Maschinen, an denen Not-Halt-Befehlsgeräte eingesetzt werden, tragen die Verantwortung für die Beachtung der Betriebsanleitung, wie auch für die Einhaltung der für sie geltenden Sicherheitsvorschriften und -regeln. Für den Einbau und Betrieb von Not-Halt-Befehlsgeräten müssen zur bestimmungsgemäßen Verwendung folgende Anforderungen beachtet und eine Gefahrenbewertung durchgeführt werden:
- EN ISO 13849-1
- EN ISO 13850
- EN ISO 13849-2
- EN 60204-1/A1
- EN 60947-5-5

3. Produktbeschreibung
Aufbau: Die Not-Halt-Befehlsgeräte bestehen aus einer Kombination von Betätigern mit einem oder mehreren Schaltelementen. Die Not-Halt-Befehlsgeräte gibt es als Einbauversion oder in einem Gehäuse verbaut. Die Betätigung erfolgt durch Drücken, die Entriegelung erfolgt je nach Variante entweder durch:
- Drehbewegung nach rechts oder beide Richtungen (je nach Variante)
- Ziehen entgegen der Betätigungsrichtung

"Aktiv/Inaktiv"-Varianten:
- "Aktiv": beleuchtet, rot, Not-Halt Funktion gegeben
- "Inaktiv": unbeleuchtet, transparent, keine Not-Halt Funktion

Varianten mit Schloss:
- Die Entriegelung erfolgt per Rechtsdrehung des Schlüssels nach Betätigung des Not-Halt-Befehlsgerätes. Der Schlüssel muss in jedem Betätigungszustand abgezogen werden und sollte sich nur während des Entriegelns im Betätiger befinden. Damit lassen sich Verletzungen der Hände vermeiden.

ENGLISH (EN)

Operating Instructions
EMERGENCY STOP Control Units

Series
RAFIX 16, RAFIX 22 FS⁺, RAFIX 22 FSR, RAFIX 22 QR

1. Safety information
- Please read the operating manual carefully before commissioning.
- Emergency stop control components are there to protect personnel. Improper installation, improper use or manipulation can lead to serious injuries to persons!
- Emergency stop control components must not be bypassed, removed or otherwise rendered ineffective!
- Disconnect the system and device from the power supply before starting installation!
- Before commissioning the machine or system for the first time, check the emergency stop control component for correct installation and function by test actuation.
- Emergency stop control components with visible damage must be replaced immediately.
- The emergency stop function must not be used as a substitute for protective measures or other safety functions.
- The emergency stop function must not impair the effectiveness of safety features or of devices with other safety functions.

2. General description and intended use
Emergency stop control components are electromechanical switching devices for the protection of personnel. They are used for quick shutdown to bring machines, vehicles and systems into a safe condition to avoid or reduce hazards and damage to people and machines.
The following regulations apply in particular to commissioning, use and technical inspections:
- The Machinery Directive 2006/42/EC
- The safety regulations as well as
- The accident prevention regulations / safety rules

Manufacturers and users of machinery on which emergency stop control components are used assume responsibility for the observance of the operating manual, as well as for the observance of the safety rules and regulations applicable to them. For the installation and operation of emergency stop control components, the following requirements must be observed and a hazard assessment carried out for the intended use:
- EN ISO 13849-1
- EN ISO 13850
- EN ISO 13849-2
- EN 60204-1/A1
- EN 60947-5-5

3. Product description
Structure: The emergency stop control components consist of a combination of actuators with one or more switching elements. The emergency stop control components are available as a built-in version or installed in a housing. Actuation takes place by pressing, unlocking takes place depending on the type either by:
- Rotation to the right or both directions (depending on the variant)
- Pulling against the actuating direction

„Active/Inactive" types:
- „Active": illuminated, red, emergency stop function active
- „Inactive": non-illuminated, transparent, no emergency stop function

Types with a key lock:
- Unlocking is performed by turning the key to the right after actuating the emergency stop control component. The key must be removed in every actuation state and should only be in the actuator during unlocking. This helps to avoid injuries to the hands.

FRANÇAIS (FR)

Mode d'emploi auxiliaires de commande
d'ARRÊT D'URGENCE

Série
RAFIX 16, RAFIX 22 FS⁺, RAFIX 22 FSR, RAFIX 22 QR

1. Consignes de sécurité
- Lire la notice d'utilisation attentivement avant la mise en service.
- Les auxiliaires de commande d'arrêt d'urgence ont une fonction de protection des personnes. Un montage incorrect, une application ou des manipulations non conformes peuvent occasionner des graves blessures aux personnes !
- Les auxiliaires de commande d'arrêt d'urgence ne doivent pas être contournés, retirés ou rendus inefficaces de toute autre façon !
- Avant de commencer l'installation, mettre l'installation et l'appareil hors tension !
- Avant la première mise en service de la machine ou de l'installation, vérifier que l'auxiliaire de commande d'arrêt d'urgence est monté et fonctionne correctement.
- Les auxiliaires de commande d'arrêt d'urgence présentant des dommages visibles doivent être remplacés sans délai.
- La fonction d'arrêt d'urgence ne doit pas servir de substitut aux mesures de protection ou autres fonctions de sécurité.
- La fonction d'arrêt d'urgence ne doit pas entraver l'efficacité des dispositifs de protection ou dispositifs assurant d'autres fonctions de sécurité.

2. Description générale et utilisation conforme
Les auxiliaires de commande d'arrêt d'urgence sont des appareils de commutation électromécaniques de protection des personnes. Ils servent à la mise l'arrêt rapide pour mettre les machines, véhicules et installations dans un état sûr, afin d'éviter ou réduire dangers et dommages pour les gens et la machine.
Les prescriptions suivantes s'appliquent tout particulièrement pour la mise en service, l'utilisation et les vérifications techniques :
- La directive machine 2006/42/CE
- Les prescriptions de sécurité et
- Les prescriptions de prévention des accidents / règles de sécurité

Le constructeur et l'utilisateur de machines sur lesquelles des auxiliaires de commande d'arrêt d'urgence sont mis en œuvre assument la responsabilité du respect de la notice d'utilisation ainsi que des prescriptions et règles de sécurité qui s'appliquent à eux. Pour le montage et l'exploitation d'auxiliaires de commande d'arrêt d'urgence, les exigences suivantes doivent être respectées et une évaluation des risques doit être menée pour une utilisation conforme :
- EN ISO 13849-1
- EN ISO 13850
- EN ISO 13849-2
- EN 60204-1/A1
- EN 60947-5-5

3. Description du produit
Structure : les auxiliaires de commande d'arrêt d'urgence sont une combinaison d'actionneurs avec un ou plusieurs éléments de commutation. Les auxiliaires de commande d'arrêt d'urgence existent en version encastrable ou montés dans un boîtier. L'actionnement est réalisé par pression, le déverrouillage selon la variante par :
- Mouvement de rotation vers la droite ou dans les deux sens (selon la variante)
- Tirage dans le sens contraire de l'actionnement

Variantes « actif/inactif » :
- « Actif » : éclairé, rouge, fonction d'arrêt d'urgence présente
- « Inactif » : non éclairé, transparent, aucune fonction d'arrêt d'urgence

Variantes avec serrure :
- Le déverrouillage est réalisé par rotation à droite de la clé après actionnement de l'auxiliaire de commande d'arrêt d'urgence. La clé doit pouvoir être retirée dans n'importe quel état d'actionnement et ne doit se trouver dans l'actionneur que pendant le déverrouillage. Ceci permet d'éviter les blessures aux mains.

Produkt Product Produit	Einbau Ø mm Mounting Ø mm Montage Ø mm	Betätiger Actuator Actionneur	Schaltelement Contact Block Élément de commutation
RAFIX 16	Ø 16.2	1.30.074.xxx/xxxx 9.30.074.xxx/xxxx	1.20.123.xxx/xxxx 9.20.123.xxx/xxxx
RAFIX 16 F	□ 22.3 Ø 22.3	1.30.094.xxx/xxxx 9.30.094.xxx/xxxx	
RAFIX 22 QR	Ø 22.3	1.30.243.xxx/xxxx 9.30.243.xxx/xxxx	1.20.124.xxx/xxxx 1.20.125.xxx/xxxx 5.00.100.xxx/xxxx 9.20.124.xxx/xxxx 9.20.125.xxx/xxxx
RAFIX 22 FS	Ø 22.3	1.30.253.xxx/xxxx 9.30.253.xxx/xxxx	1.20.126.xxx/xxxx 1.20.146.xxx/xxxx 9.20.126.xxx/xxxx 9.20.146.xxx/xxxx
RAFIX 22 FS⁺	Ø 22.3	1.30.273.xxx/xxxx 9.30.273.xxx/xxxx	
RAFIX 22 FSR	Ø 22.3	1.30.283.xxx/xxxx 9.30.283.xxx/xxxx	

Tabelle 3.1 Weitere technische Daten sind dem eCatalog zu entnehmen: ecatalog.rafi-group.com
Table 3.1 Further technical data can be found in the eCatalog: ecatalog.rafi-group.com
Tableau 3.1 Vous trouverez d'autres données techniques dans le eCatalog : ecatalog.rafi-group.com

The information in this data sheet only contains general descriptions and / or performance features, which may not apply precisely as described to the respective application, and which my change due to further product enhancements. The technical data, illustrations and other information about our products are the mere results of individual technical testing. These descriptions and other product features are only binding if they expressly agreed upon at the time of the conclusion of a binding contract. In all other cases, we reserve the right to make technical changes as well as changes of availability. Pictures and other graphic illustrations are approximations only. All product names may be trademarks or brand names of the RAFI Group or any other sub-supplier of RAFI. The use of such by any third parties for their own purposes may infringe the rights of the respective entity holding those rights.

RAFI GmbH & Co. KG

Ravensburger Str. 128-134
88276 Berg / Ravensburg
Germany
www.rafi-group.com,
info.headquarters@rafi-group.com