IF0004

Inductive sensor

IF-2004-BBOW

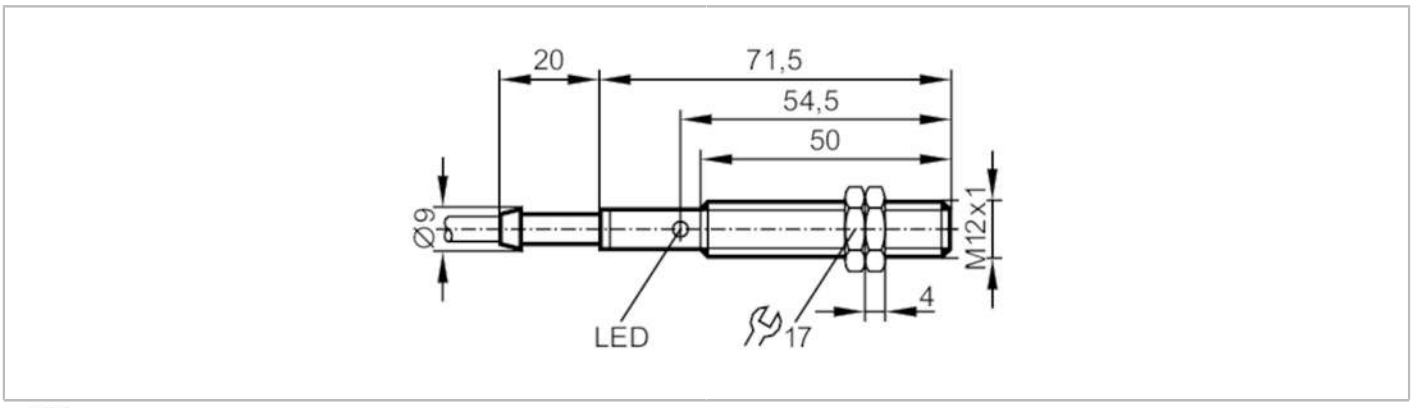

Product characteristics		
Output function		normally closed
Sensing range	[mm]	4
Housing		threaded type
Dimensions	[mm]	M12 x 1 / L = 71.5
Electrical data		
Frequency AC	[Hz]	47...63
Operating voltage	[V]	20...250 AC
Protection class		II
Reverse polarity protection		no
Outputs		
Output function		normally closed
Max. voltage drop switching output AC	[V]	8.5
Minimum load current	[mA]	8
Max. leakage current	[mA]	2
Permanent current rating of switching output AC	[mA]	200; (250 (...50 °C))
Short-time current rating of switching output	[mA]	900; (20 ms / 0,5 Hz)
Switching frequency AC	[Hz]	25
Short-circuit proof		no
Overload protection		no
Detection zone		
Sensing range	[mm]	4
Real sensing range Sr	[mm]	4 ± 10 %
Operating distance	[mm]	0...3.25
Accuracy / deviations		
Correction factor		steel: 1 / stainless steel: 0.7 / brass: 0.4 / aluminium: 0.3 / copper: 0.2
Hysteresis	[% of Sr]	1...15
Switch point drift	[% of Sr]	-10...10

IF0004

Inductive sensor

IF-2004-BBOW

Operating conditions			
Ambient temperature	[°C]	-25...80	
Protection		IP 67	
Tests / approvals			
EMC		EN 60947-5-2	
MTTF	[years]	932	
Mechanical data			
Weight	[g]	100.6	
Housing		threaded type	
Mounting		non-flush mountable	
Dimensions	[mm]	M12 x 1 / L = 71.5	
Thread designation		M12 x 1	
Materials		PBT	
Displays / operating elements			
Display		switching status	1 x LED, yellow
Electrical connection			
Required protection		miniature fuse to IEC60127-2 sheet 1; ≤ 2 A; fast acting	
Accessories			
Items supplied		lock nuts: 2	
Remarks			
Remarks		Recommendation: Check the safe functioning of the unit after a short circuit.	
Pack quantity		1 pcs.	

Electrical connection

Cable: 2 m, PVC; 2 x 0.5 mm²

Connection

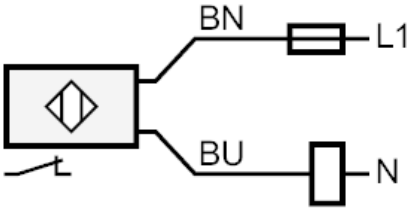

Note miniature fuse to IEC60127-2 sheet 1 ≤ 2 A fast acting
Core colours :
BN = brown
BU = blue