V 125

3½ Digit LCD Voltmeter Module

PRODUCT DESCRIPTION

This low cost compact LCD voltmeter module is ideally suited for high volume applications. It features an exceptionally large display in a miniature package and includes auto-zero and user-selectable decimal points. The module is supplied with a panel mounting bezel.

FEATURES

- Low Cost
- 12.5mm (0.5") Digit Height
- 200mV d.c. Full Scale Reading
- 1mA (typ) @ +9V d.c. Power Supply
- Auto-zero and Auto-polarity
- User Selectable Decimal Points
- Supplied with Mounting Bezel



TYPICAL APPLICATIONS

- High Volume, Low Cost Systems
- Power Supply Monitoring
- Panel-Mount Indication

ORDERING INFORMATION

	Stock Number
Standard Meter	V 125
Pack of 10 Meters	V125 (PK of 10)

ELECTRICAL SPECIFICATIONS

Specification		Min.	Typ.	Max.	Unit
Accuracy (overall error) *			0.25		% (±3 counts)
Linearity	0-1000 reading		±3		counts
	0-2000 reading		±5		counts
Sample rate			3		samples/sec
Operating temperature range		0		50	°C
Temperature stability			300		ppm/°C
Supply voltage		7.0	9	12	V d.c.
Supply current			1	2	mA

* To ensure maximum accuracy, re-calibrate periodically.

SAFETY

To comply with the Low Voltage Directive (LVD 93/68/EEC), input voltages to the module's pins must not exceed 60Vdc. The user must ensure that the incorporation of the panel meter into the user's equipment conforms to the relevant sections of BS EN 61010 (Safety Requirements for Electrical Equipment for Measuring, Control and Laboratory Use).

LASCAR ELECTRONICS LTD.
MODULE HOUSE,
WHITEPARISH,
WILTSHIRE SP5 2SJ,
UK
TEL: +44 (1794) 884567
FAX: +44 (1794) 884616
E-mail: sales@lascar.co.uk

LASCAR ELECTRONICS INC.
4258 WEST 12th STREET,
ERIE,
PA 16505,
USA
TEL: +1 (814) 835 0621
FAX: +1 (814) 838 8141
E-mail: us-sales@lascarelectronics.com

LASCAR ELECTRONICS (HK) LTD.
8th FLOOR, CHINA AEROSPACE CENTRE,
143 HOI BUN ROAD,
KWUN TONG, KOWLOON,
HONG KONG
TEL: +852 2389 6502
FAX: +852 2389 6535
E- mail: saleshk@lascar.com.hk

DIMENSIONS All dimensions in mm (inches)

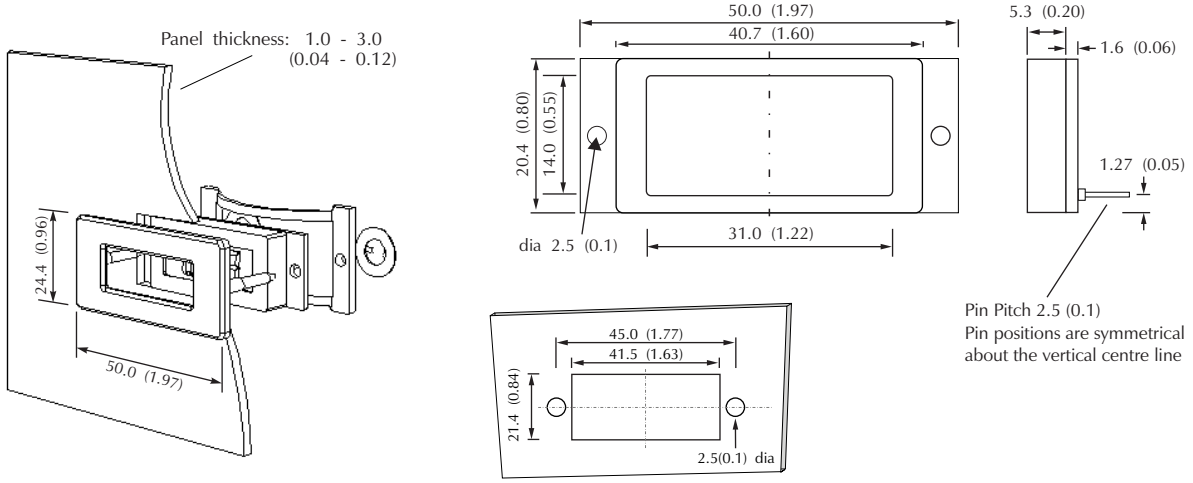

PANEL FITTING

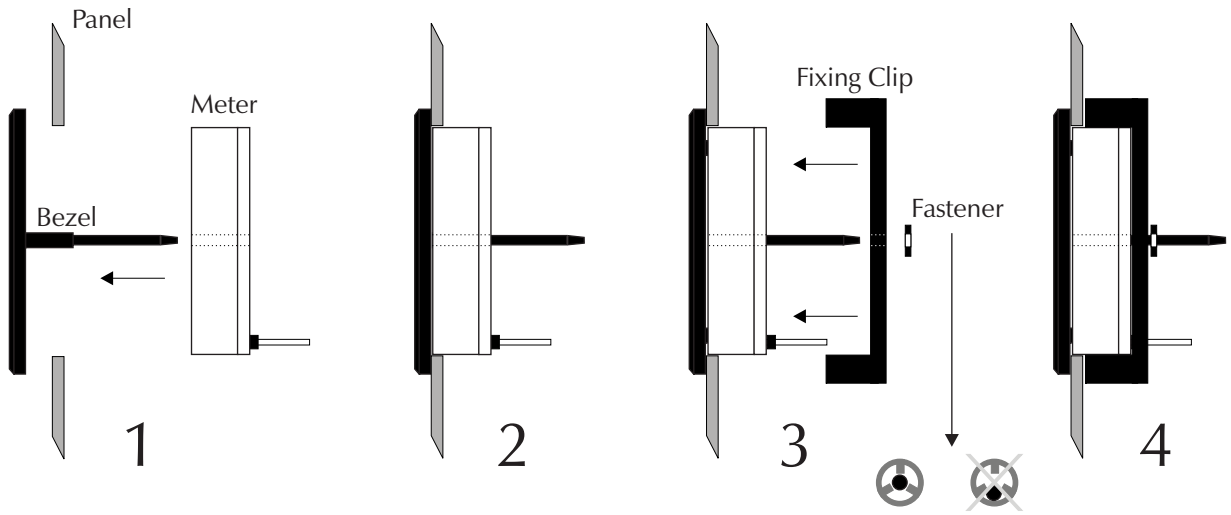

FUNCTIONAL BLOCK DIAGRAM

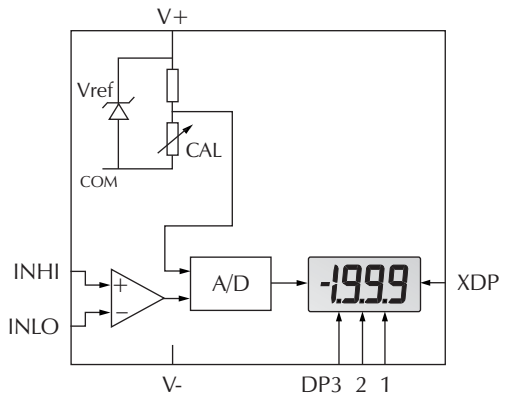

PIN CONFIGURATION (rear view)

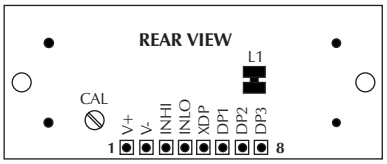

CIRCUIT DIAGRAM

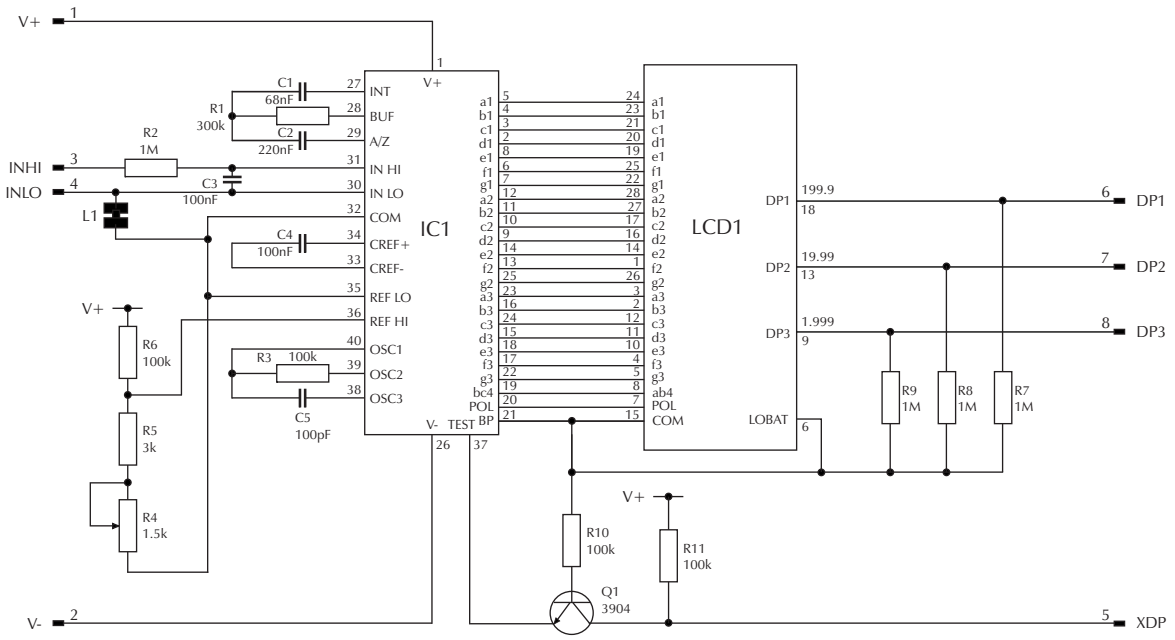

PIN FUNCTIONS

1. V+ Positive power supply connection.
2. V- Negative power supply connection.
3. INHI Positive measuring input with reference to IN LO.
4. INLO Negative measuring input with reference to IN HI.

Analogue inputs must be no closer than 1V to either the positive or negative supply.

5. XDP Connect to DP1, 2 or 3 to display required decimal point.
6. DP1 Connect to XDP to display Decimal Point 1 (199.9).
7. DP2 Connect to XDP to display Decimal Point 2 (19.99).
8. DP3 Connect to XDP to display Decimal Point 3 (1.999).

Solder Links:

L1 Normally Closed, connects COM to INLO.

SCALING

Two resistors Ra and Rb may be used to alter the full scale reading (FSR) of the meter - see table. The meter will have to be re-calibrated by adjusting the calibration Potentiometer on the rear

	FSR	Ra	Rb
Voltage Vin	2V	910k	100k
	20V	1M	10k
	200V	1M	1k
	2000V*	1M	100R
Current Iin	200µA	0R	1k
	2mA	0R	100R
	20mA	0R	10R
	200mA	0R	1R

*Ensure that Ra is rated for high voltage use.

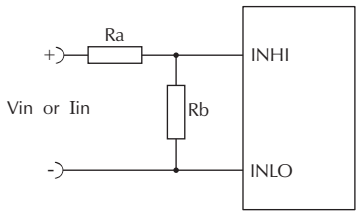

APPLICATIONS

Do not connect more than one meter to the same power supply if the meters cannot use the same signal ground. Taking any input beyond the power supply rails will damage the meter.

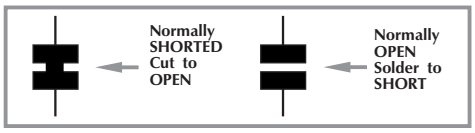

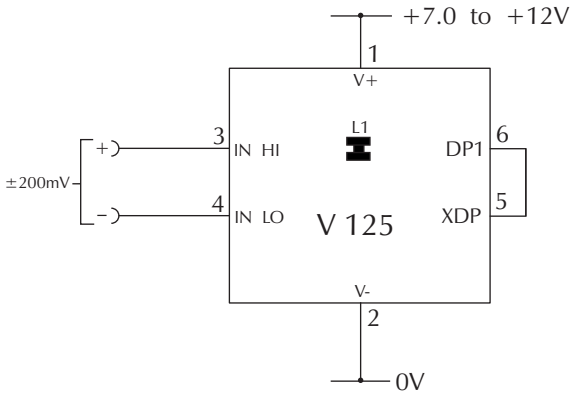

Measuring an input voltage referenced to a floating supply, i.e. the input voltage and the meter's power supply are isolated from each other. Check Link L1 is closed.

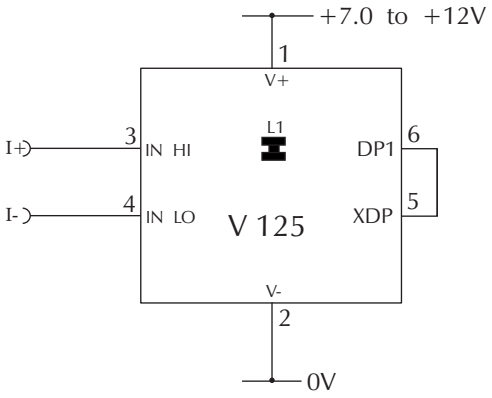

Measuring a current referenced to a floating supply, i.e. the current being measured and the meter's power supply are isolated from each other. Check Link L1 is closed.

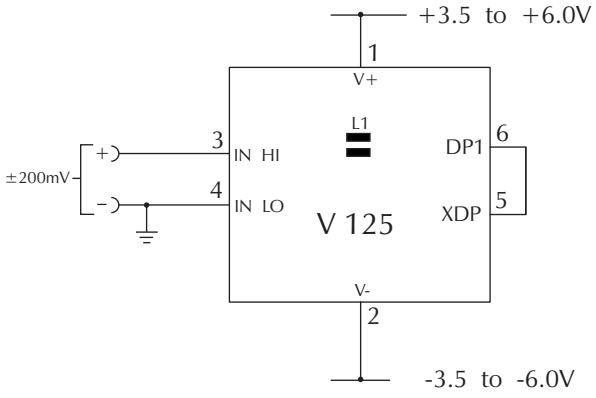

Measuring a single ended input referenced to supply, i.e. the input voltage and the meter's power supply share the same 0V rail. Check Link L1 is open.