

ComEx control stations

Features

- 3 standard enclosures
- Easy to install
- Extremely flexible
- Customer-tailored solutions

Description

The ComEx program

ComEx is a flexible system offering standard as well as customer-specific local control and indicating units.

You have the choice between three standard enclosures which can accomodate up to three different control and indicating units. Combinations of up to three ComEx enclosures are possible.

Either stuffing glands sizes M 20 x 1.5 and M 25 x 1.5 of plastic or cable glands of metal are available. The plastic glands require no lock nuts. Metal glands are screwed into a metal earth plate sheet inside of the enclosure. Maximum amount of cable clands: two off.

To ensure easier operation on site, each enclosure can be equipped with an individual info-label.

Fully preassembled ComEx units

On the following pages you will find our complete range of fully preassembled ComEx units, available immediately. The units are equipped with 1 to 3 elements. Standard cable entries are plastic glands type M 20 x 1.5 for a 6 to 12 mm diameter cable.

For offshore applications special oil-resistant attachments are available.

Explosion protection

Ex protection type
Ⓔx II 2 G EEx edm IIC T6

Certification
PTB 00 ATEX 1068
UL E184198

Permissible ambient temperature
-55 °C to +60 °C

Technical data

Connection
Terminals 2.5 mm²

PE conductor terminals
4 x 2.5 mm²

Rated insulation voltage
max. AC 690 V

Nominal current
max. 16 A

Cable entry
standard version:
M 20 x 1.5 for cable ∅ 6 to 12 mm
special versions:
M 20 x 1.5 for cable with ∅ 5 to 9 mm
M 25 x 1.5 for cable with ∅ 13 to 18 mm
M 25 x 1.5 for cable with ∅ 9 to 16 mm

Enclosure
thermoplastics

Protection class
IP 66/IP 67

03-0330-0189-10/99-BCS-A200863/1E

Dimensions fully preassembled units

Single unit

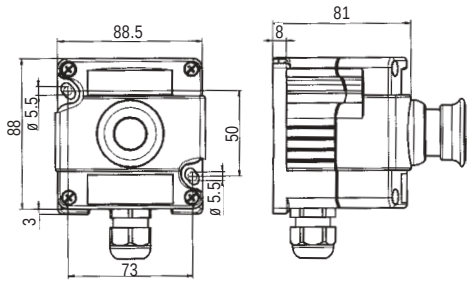

Double unit

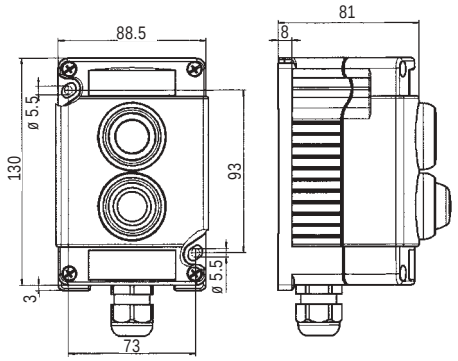

Triple unit

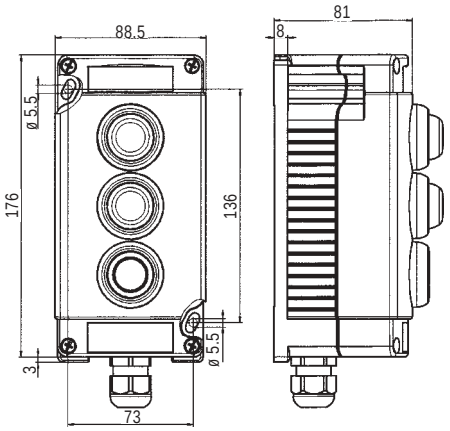

Measuring instrument with actuator

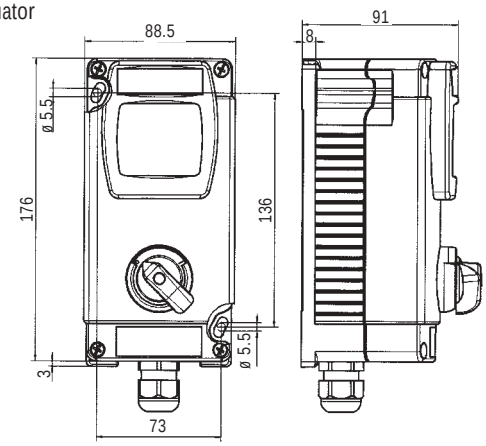

Selection chart

Wiring diagram	Description	Weight	➡ Order no.
	**1 pushbutton** 1 NO + 1 NC incl. labels red, green, yellow, white	0.33 kg	**07-3511-10P74**
	**1 NOT/AUS Emergency Stop** 1 NO + 1 NC marked NOT/AUS and Emergency-Stop	0.36 kg	**07-3511-10N84**
	**1 Mushroom Keyswitch** 1 NO + 1 NC with key to reset	0.40 kg	**07-3511-10K34**
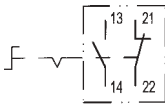	**1 Selector switch** 1 NO + 1 NC, 2 position with 2 stops 0 and I, latching	0.35 kg	**07-3511-10S94**
	**1 Selector switch** 1 NO + 1 NC, 3 position with 3 stops I - 0 - II, latching	0.35 kg	**07-3511-10S04**
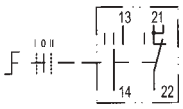	**1 Selector switch** 1 NO + 1 NC, 3 position with 3 stops I - 0 - II, touch	0.35 kg	**07-3511-10S14**
	**1 Lamp lens** red green yellow white	0.35 kg	**07-3511-10LRR** **07-3511-10LGG** **07-3511-10LYY** **07-3511-10LWW**
	**1 Mushroom Pushbutton**, black 1 NO + 1 NC	0.35 kg	**07-3511-10P84**
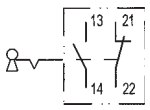	**1 Keyswitch** 1 NO + 1 NC lockable in both positions	0.40 kg	**07-3511-10K04**
	**1 Keyswitch** 1 NO + 1 NC lockable in the pushed-in-position	0.40 kg	**07-3511-10K14**
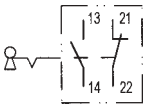	**1 Keyswitch** 1 NO + 1 NC lockable in the initial position	0.40 kg	**07-3511-10K24**

Selection chart

	Wiring diagram	Description	Weight	➡ Order no.
	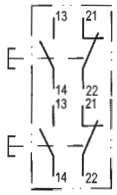	**2 pushbuttons** 1 NO + 1 NC each including key labels	0.50 kg	**07-3512-10P74P74**
	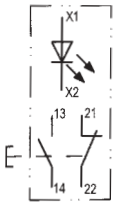	**1 indicator lamp, 1 pushbutton** with indicated lamp red green yellow white blue 1 NO + 1 NC	0.52 kg	**07-3512-10LRRP74** **07-3512-10LGGP74** **07-3512-10LYYP74** **07-3512-10LWWP74** **07-3512-10LBBP74**
	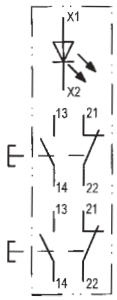	**1 indicator lamp, 2 pushbuttons** with indicated lamp red green yellow white 1 NO + 1 NC each	0.70 kg	**07-3513-10LRRP74P74** **07-3513-10LGGP74P74** **07-3513-10LYYP74P74** **07-3513-10LWWP74P74**
	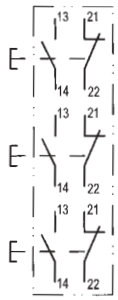	**3 pushbuttons** 1 NO + 1 NC each including key labels	0.68 kg	**07-3513-10P74P74P74**
	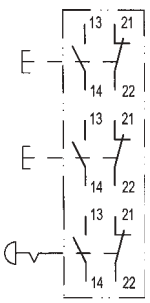	**2 pushbuttons** **1 emergency stop button** 1 NO + 1 NC each	0.70 kg	**07-3513-10P74P74N84**