996 Series

Electromagnetic Overhead Closer

Introduction

Briton 996 Series is a range of closers with an integrated electromagnetic hold open mechanism. Typically used on fire rated doors where the hold-open or swing-free feature is required either in high traffic areas for convenience, or in situations where it would be difficult to satisfy the maximum opening force requirements of Part M of Building Regulations.

These fixed strength size EN 3, EN 4 and EN 5 electromagnetic door controls can be linked to the building's alarm system eliminating the illegal practice of wedging fire doors open. Upon the sounding of the fire alarm or in the event of power failure, the electromagnet disengages and the door closer closes the door in the normal manner to maintain fire safety.



996 in Silver with black armset

Features & Functions

- Fixed power size EN 3, EN 4 & EN 5
- Satisfies the requirements of Approved Document M
- Certified for door mount pull, transom mount push or parallel arm push side applications
- Catch plate can be set to operate in hold-open or swing-free at the point of installation
- Adjustable closing speed & latch action
- Fixing template for quick and easy installation
- Designed for use on 24v DC circuits linked to a fire alarm
- Supplied with armset & brackets for door or transom mounting (for parallel mounting please specify when ordering)
- Electromagnet is controlled by the building fire alarm/detector and activates the 'catch plate' to ensure the door closes automatically in the event of a fire or power failure
- Optional rear cable entry allows units to protect the closer against vandalism.
- Supplied with flexible armoured power loop (330mm long as standard) to run power safely from the door frame to the closer

Certification

UKCA Marked to EN 1155 -	9963 (1121-CPR-UK-AE7615) 9964 (1121-CPR-UK-AE7616) 9965 (1121-CPR-UK-AE7608)
CE Marked to EN 1154 & EN 1155 -	9963 (2812-CPR-AE0007) 9964 (2812-CPR-AE0008) 9965 (2812-CPR-AE0012)

Certifire Approved (CF109)

Fire tested to EN 1634-1 for use on fire doors up to 2hr timber

DoP available at www.britondops.co.uk

Allegion (UK) Limited
35 Rocky Lane, Aston, Birmingham B6 5RQ
T: +44 (0) 330 8080 617
E: contactuk@allegion.com

Briton

DOOR CONTROLS

Electromagnetic Overhead Closer Briton 996 Series

Rear cable entry

Optional rear cable entry allows units to be installed with concealed cable using a separate concealed door loop to protect the closer against vandalism

Swing-free or Hold-open

'Catch plate' can be set during installation to operate in hold-open or swing-free operation to suit individual doorset requirements within a building.

Finish options

Fabricated steel cover available in silver with matching arms.

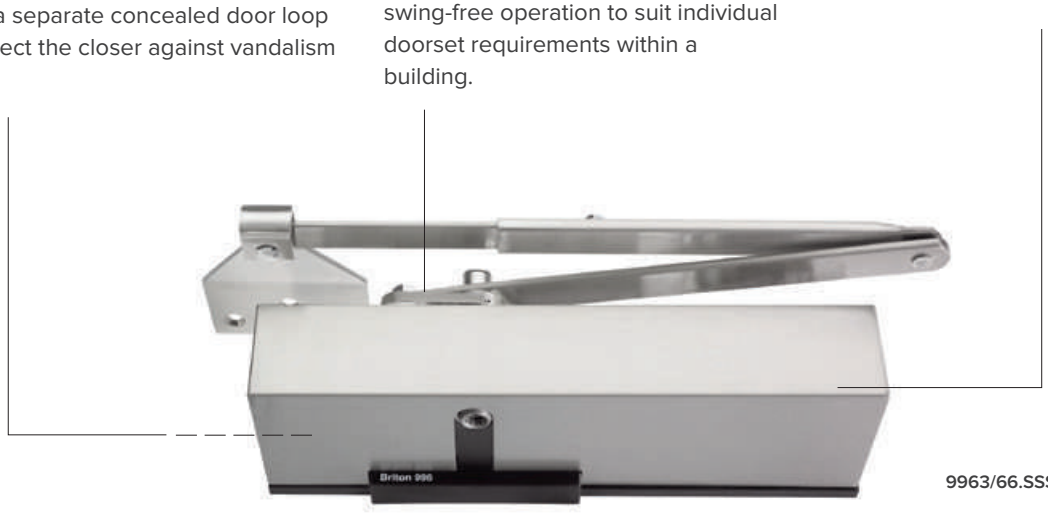

9963/66.SSS

Product features	Product references					
	9963/01	9963/66	9964/01	9964/66	9965/01	9965/66
Closer type	Electromagnetic hold-open or swing-free projecting arm closers					
UKCA & CE marked	■	■	■	■	■	■
Fixed closing power EN size	3	3	4	4	5	5
Door limits (width/weight)	950mm / 60kg		1100mm / 80kg		1250mm / 100kg	
Adjustment type	Fixed power	Fixed power	Fixed power	Fixed power	Fixed power	Fixed power
Maximum angle of opening	110˚	110˚	110˚	110˚	110˚	110˚
Adjustable closing speed & latch action	■	■	■	■	■	■
Door (Fig.1) & Transom (Fig.61) Parallel	■		■		■	
(Fig.66) mounting Electromagnetic		■		■		■
hold-open Electromagnetic swing-free	■	■	■	■	■	■
	■	■	■	■	■	■
Finishes available	SES					
UKCA & CE Classification	3 8 3 1 1 3	3 8 3 1 1 3	3 8 4 1 1 3	3 8 4 1 1 3	3 8 5 1 1 3	3 8 5 1 1 3

Finishes

Available in spray silver finish with matching armset.

SES
Sprayed silver

996 Series

Electromagnetic Overhead Closer

Power requirements

Electromagnet continuous rating: 2.35 watts max. at 26v DC

Power requirement: 24v DC - 90mA nominal.

Power supply feed to electromagnet is through flexible armoured loop.

Note: Power for ancillary devices must not be drawn from the alarm system except under alarm conditions and then must not reduce the reliability of the supply.

Testing

Check that the voltage is within specified range at each unit after installation. It is recommended that the equipment is tested at weekly intervals for correct function.

Accessories & Parts	
996/863/UF	Magnet for Briton 996
996/AP01	Fig.1 arm pack
996/AP66	Fig.66 arm pack
996/CP01	Cover pack for Fig.1
996/DP66	Drop plate for Fig.66
996/FL	Flexible loop - 330mm long (Standard)
996/FLSL/550	Flexible loop - 550mm long
996/FLSL/600	Flexible loop - 600mm long
996/FLSL/700	Flexible loop - 700mm long
996/FP01/ZP	Fig.1 fixing pack
996/FP66/ZP	Fig.66 fixing pack

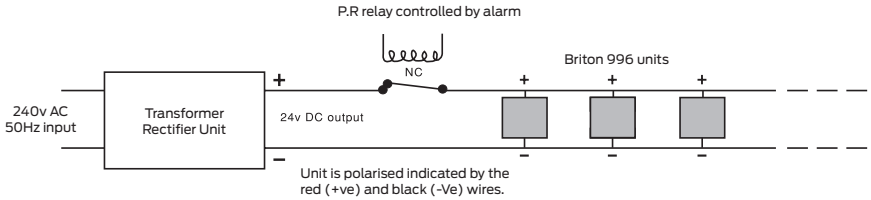

Closer in door mount (closer body mounted on pull face of door)

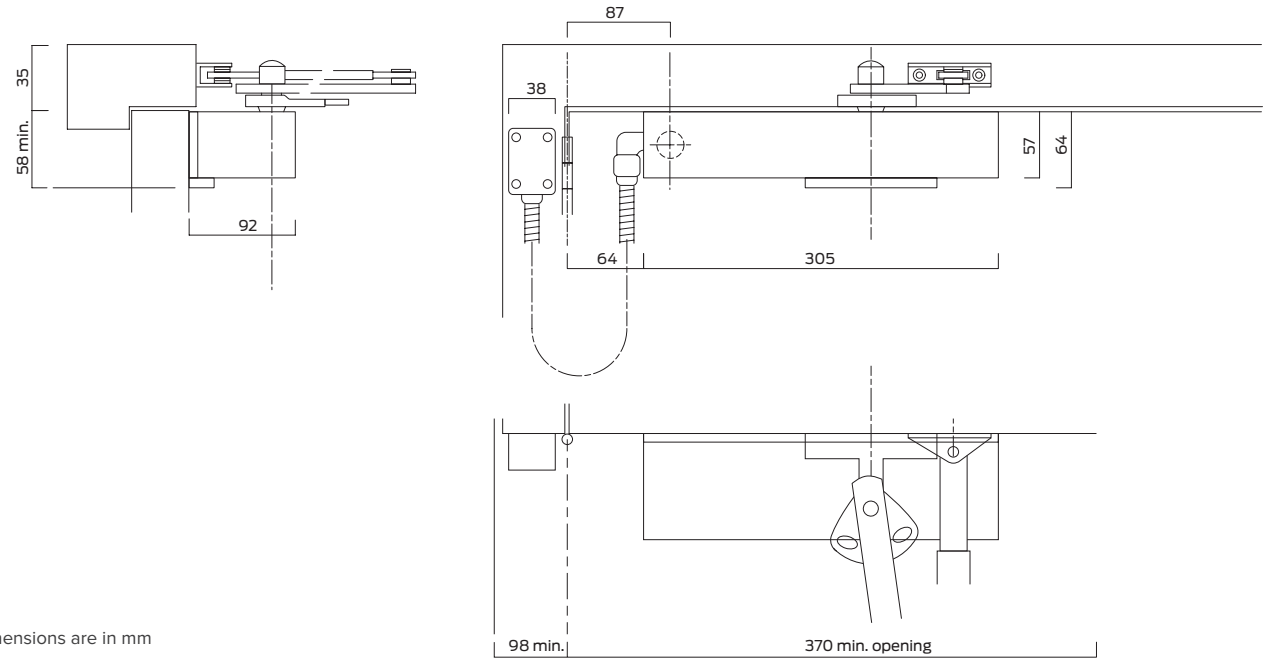

All dimensions are in mm

Allegion (UK) Limited
35 Rocky Lane, Aston, Birmingham B6 5RQ
T: +44 (0) 330 8080 617
E: contactuk@allegion.com

ALLEGION™

www.briton.co.uk

General Maintenance

996 Series

Door controls

Allegion has identified that many problems associated with overhead door closers can be attributed directly to errors in installation rather than problems with the door closer itself. If the door is not closing properly into the frame you should first disconnect the door closer (disconnect the arm(s)) and determine that there is not an underlying problem with the door, frame or any smoke /draft seals that might be fitted.

PLEASE NOTE:

The power of the door closer should not be used to overcome problems associated with the door or other items of hardware fitted to it.

Under no circumstances should the closer body be dismantled.

Types of maintenance

Much of the routine maintenance recommended consists of a combination of visual and mechanical checks, cleaning and lubrication. Look out for the icons opposite which provide a 'quick glance' reminder of the maintenance required.

Visual checks

Primarily making a visual check on the product and surrounding door/frame looking for wear, damage, and general condition.



Functional checks

Consists of checking that the product operates properly ensuring the door can fully close without any binding or undue force required. Check that any seals or weatherstripping do not inhibit correct operation of the door



Check fixings

Fixings need to be checked regularly and tightened when necessary. Check that no projection of fixings prevents the door from swinging freely.



Lubricating

Some products will benefit from periodic lubrication using a light machine oil or as instructed.



Cleaning

Build up of grease, dust and harmful chemicals should be removed to prevent corrosion and maintain the product finish.



Accessibility

Electromagnetic door controls and low energy operators are an essential part of providing accessibility. Routine checks should be carried out to ensure continued performance.



Allegion (UK) Limited
35 Rocky Lane, Aston, Birmingham B6 5RQ
T: +44 (0) 330 8080 617
E: contactuk@allegion.com

Closer Maintenance

WEEKLY

Release the door from the fully open position and ensure that it closes fully into the frame. Ensure the latch (if fitted) engages fully into the strike plate. Repeat the process a few times from different angles of opening to ensure the door closes consistently each time.



Check and adjust the closing and latching speeds if necessary.

Check the backcheck comes into operation at the desired angle and readjust if necessary.

Check that the door or hardware does not come into contact with the door frame or the surrounding structure.



QUARTERLY

The fixings of the closer body and the bracket or slide track are subject to stress and should be checked carefully to make sure they are tight.



Periodically apply a little light machine oil to the moving joints of the arm and bracket or arm and slide track.



Check any fire and smoke seals to ensure they do not foul the action of the door.



Check for any loss of fluid from the door closer body which would indicate a failing device.

Clean the closer body, arms and bracket/track if necessary following the guidance on “Care of Finishes” on page 16 of the ‘Service & Maintenance Guide’.



FIRE DOOR APPLICATIONS

When installed as part of a fire precaution system the door closing mechanism, including the door selector if used on a double door arrangement, should be checked in accordance with standing periodic fire testing procedures.

Electromagnetic hold-open units should be tested weekly in accordance with the procedures described in the “fire precautions (workplace) regulations 1997” or the “fire precautions (workplace) (amendment) regulations 1999”.

Routinely check that all fixings of the closer body and bracket/track are tight.

Routine care of finishes as necessary.

Briton

DOOR CONTROLS

Electromagnetic Hold-Open Maintenance

In situations where a fire door in a high traffic area is fitted with a door closer an electromagnetic hold-open device may be fitted which allows the door to be held open or allowed to swing free during normal use.

However, in the event of a fire, the electromagnetic hold-open device will be deactivated allowing the door to close under the action of the door closer.

- The system is powered by a 24v supply which is normally located close to the door either in the ceiling void or convenient cupboard
- The system must be connected to a separate smoke detection system and/or the building's fire alarm system



WEEKLY

It is vitally important that the integrity of a fire door is maintained in the event of a fire. All electromagnetic hold-open devices and the ancillary equipment, including the transformer/rectifier (power supply) must be tested weekly in accordance with the procedures set out in the fire precautions regulations.

It is recommended that the following procedure be followed:

- With the door in the hold-open position simulate the fire alarm activation and check that the door is released immediately and closes fully into the frame, fully engaging the latch if fitted. The fire alarm may be simulated in a number of ways including activation of a break glass unit or by a built-in test switch on the hold-open device.
- With the door in the hold-open position switch off the power to the hold-open devices to simulate power failure. The door should be released and close fully as above.
- With the door in the hold-open position check that the door can be pulled manually off the hold-open and close fully into the frame.

ANY FAILURE OF THE DOOR TO CLOSE MUST BE RECTIFIED IMMEDIATELY

Firstly check that the failure is due to the electromagnetic device failing to release or whether the closing mechanism failed to close the door properly for some reason.

Electronic failure should be checked by a qualified technician to determine the fault.

if the closer fails to close the door properly please refer to the Door Closer section of our **'Service and Maintenance Guide'** for further information.