E30053

O-ring

O-RG 24,00X2,00/FPM 5 PIECE

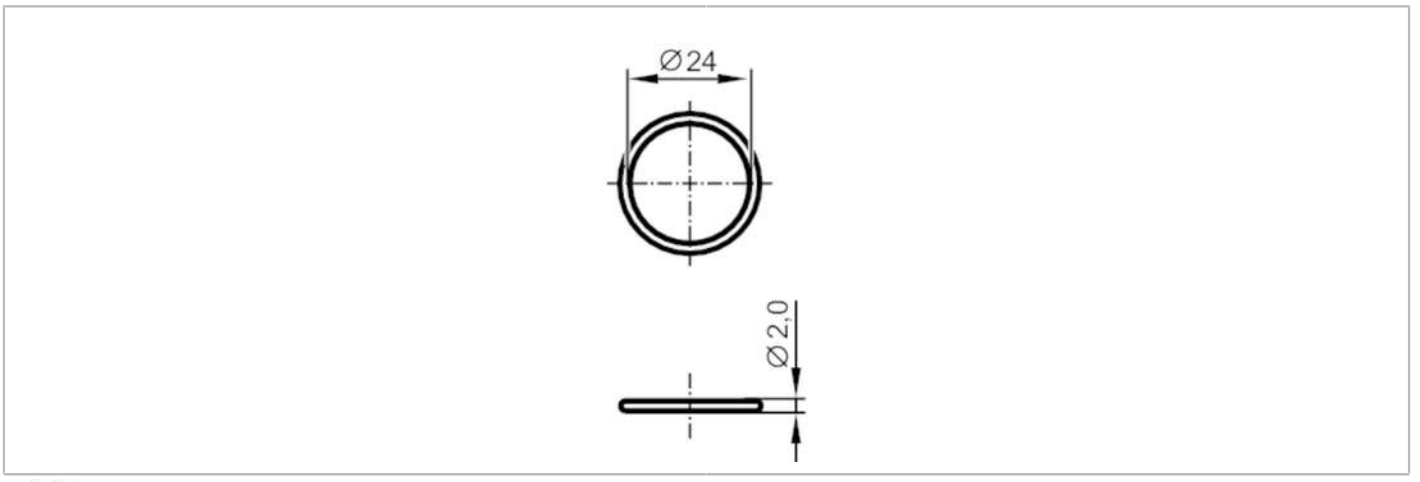

EC 1935/2004 FDA

Mechanical data		
Weight	[g]	4.2
Inside diameter	[mm]	24
External diameter	[mm]	28
Materials		FKM

Remarks	
Pack quantity	5 pcs.