- Zero Crossing or Random-on
- Load Current: 25-80A
- Over-temperature Protection
- Phase-loss Detection Function
- Fault Indication Function
- SCR Failure Detection Function
- Load Disconnection Detection Function
- Alarm Contact Output (Optional)
- Internal RC/MOV Protection Circuit
- RoHS Compliant



Ordering Information

KSQC	600	D	60	R	-C
KSQC Series (1)	Load Voltage 480: 480VAC 600: 600VAC	DC Control	Load Current 25: 25Amp 40: 40Amp 60: 60Amp 80: 80Amp	Blank: Zero Crossing R: Random-on	C: Alarm Output Blank: without Alarm Output

Input Specifications (Ta=25℃)		
External Power Parameters	Rated Voltage Range	10-32VDC
	Max Current Consumption	70mA
Control Voltage	Control Voltage Range	10-32VDC
	Must Turn-On Voltage	10VDC
	Must Turn-Off Voltage	2VDC
	Maximum Input Current	10mA

Output Specifications (Ta=25℃)		
Load Voltage Range	480VAC	200-530VAC
	600VAC	200-660VAC
Transient Overvoltage	480VAC	1200Vpk
	600VAC	1600Vpk
Minimum Load Current	200mA	
Maximum Turn-On Time	100ms	
Maximum Turn-Off Time	100ms	
Maximum Surge Current (@10ms)	25A	300A
	40A	550A
	60A	1000A
	80A	1500A
Maximum Off-State Leakage Current@Rated Load Voltage		10mA
Maximum On-State Voltage Drop@Rated Current		1.6Vrms
Minimum Off-State dv/dt@Maximum Rated Voltage		500V/μs

General Specifications

General Specifications (Ta=25℃)		
Alarm Contact Parameters	Contact Resistance	<70mΩ
	Maximum Current	1A @250VAC/30VDC
Dielectric Strength (50/60Hz)	Input/Output	4000Vrms
	Input,output/Base	2500Vrms
Minimum Insulation Resistance (@500VDC)	1000MΩ	
Ambient Temperature Range	-30°C ～ +80°C	
Storage Temperature Range	-30°C ～ +100°C	
Weight (Typical)	290g	

Function Introduction	
Phase-loss Detection	When phase-lack failure happens during 3 phase voltage input at the work, the relay will automatically cut off the output with the fault indicator lighted and give out a fault signal.
	When no control signal, if phase-lack failure happens, the relay will give out a fault signal with the fault indicator lighted.
Over-temperature Protection	When the relay is working, the relay itself could monitor SSR power component temperature at any time; when the plate temperature is more than 85 ºC, the relay would cut off the output; at the same time, alarm LED will be lighted and give out fault signal; Only when the plate temperature reduces to less than 60 ºC , the relay would resume its operation;
SCR Failure and Load Disconnection Detection	When no control signal, if the load disconnection or SCR failure happens, the relay output will show fault status with the indicator lighted.
	After entering control signal and SCR starts to work properly,if SCR short circuit or load disconnection happens,the relay output will show fault status with the indicator lighted

Applications

Suitable for Motor control, Kiln temperature control system, Large oven, and etc.

Outline Dimensions

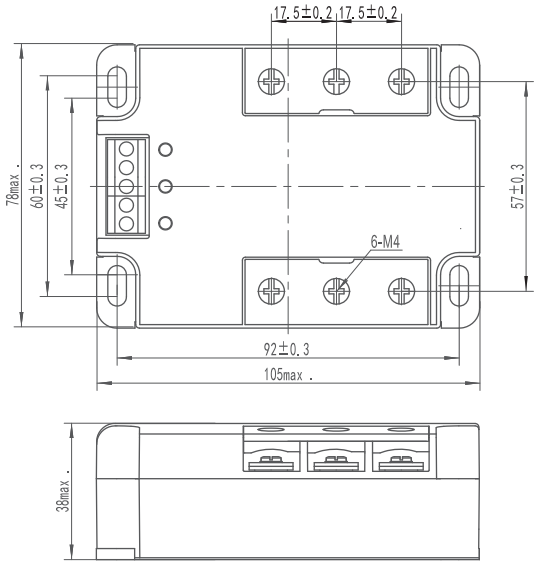

Wiring Diagram

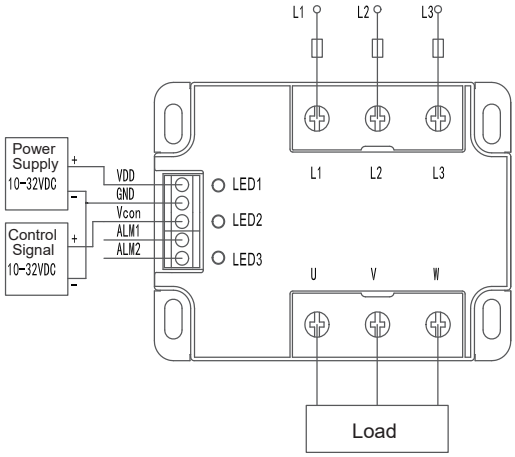

VDD: External DC power anode (10-32VDC)

GND: External DC power cathode (0V)

V_{CON}: Control voltage input (10-32VDC)

ALM1, ALM2: Failure alarm signal output
Short-circuited during failure

LED1: Power indication of external power supply

LED2: Control signal indication

LED3: Failure indication

Thermal Derating Curve

25A

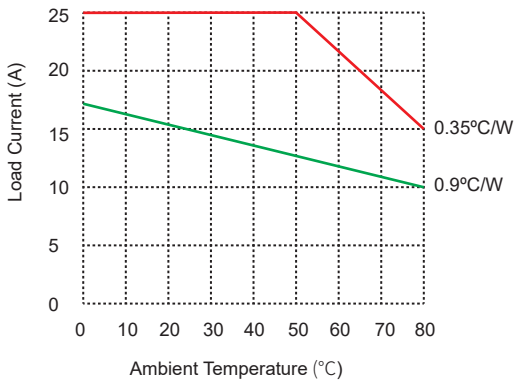

40A

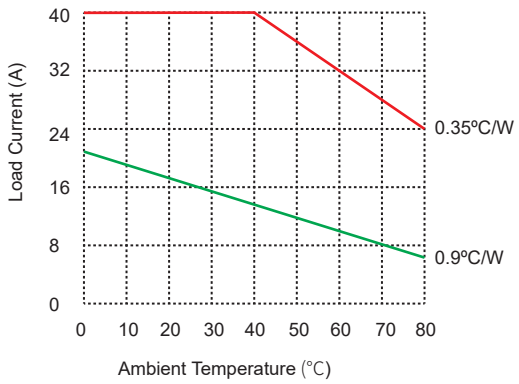

60A

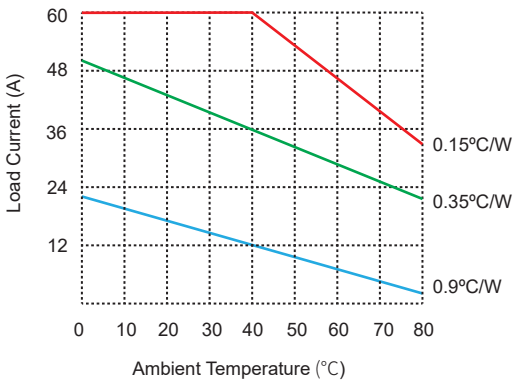

80A

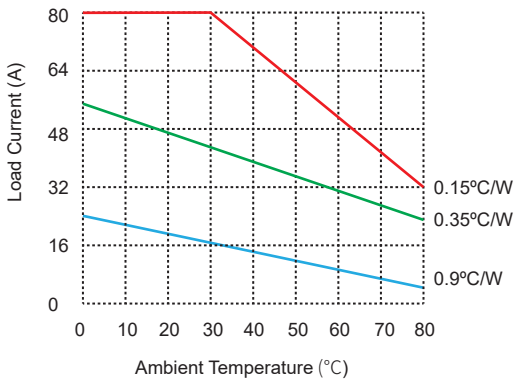

General Notes

1. With internal phase-loss protection function, L1, L2, L3 should be connected to input voltage, U, V, W should be connected to the load in order to work properly. The relay will not work if the connection is reverse.
2. The relay temperature protection function will automatically resume when the plate temperature is lower than the set value.
3. Relay must be mounted to proper sized heat sink based on thermal curves. Thermal grease or a thermal pad must be used between relay and heat sink and be torqued down to 18-20/2.0-2.2 in-lb/N·m.
4. When connecting wiring to SSR please ensure screws are torqued down properly (input 4.43/0.5 in lb/N·m, output 18-20/2.0-2.2 in lb/N·m).
5. When ambient temperature is above 25°C, the maximum load current decreases. See thermal derating curve.
6. When controlling an inductive load, a suppression circuit should be used.
7. To avoid the damage to control circuit, correct polarity should be observed.

Agency Approvals (Certification)

Trademark Change Notification

Due to the company's strategic development needs, Xiamen Kudom Electronics Technology Co., Ltd will be acquired by i-Autoc (Xiamen) Investment Co., Ltd from 1st of July 2019. After the acquisition, all the products by Xiamen Kudom Electronics Technology Co., will no longer use Kudom trademark, but use i-Autoc trademark. The details of the change are as follows.

The original trademark KUDOM will be changed to i-Autoc. The original trademark KUDOM will still be used until 30th June 2019.

This is a change to the trademark only, the Company Name, Manufacturing Location, Management Team, Product Part Numbers and Safety Approval Licence Numbers (cUL, TUV, CCC, S-mark Etc) are to remain the same.