PowerStor®

Supercapacitors

XB Series

Description

Cooper Bussmann PowerStor supercapacitors are unique, ultra-high capacitance devices utilizing electrochemical double layer capacitor (EDLC) construction combined with new, high performance materials. This combination of advanced technologies allows Cooper Bussmann to offer a wide variety of capacitor solutions tailored to specific applications that range from a few micro-amps for several days to several amps for milliseconds.

Snap-In Cylindrical Device



Features & Benefits

- Over 10-Year Operating Life at Room Temperature
- Ultra Low ESR for High Power Density
- Large Capacitance for High Energy Density
- Long Cycle Life
- UL Recognized

Applications

- Hybrid Battery or Fuel Cell Systems
- High Pulse Current Applications
- UPS / Hold Up Power

Specifications	
Capacitance	300F to 400F
Working Voltage	2.5V
Surge Voltage	2.85V
Capacitance Tolerance	-10% to +10%
Operating Temperature Range	-25°C to 70°C

Standard Product

Capacitance (F)	Part Number	Nominal ESR (mΩ) (Equivalent Series Resistance) 1kHz (ref)	Nominal ESR (mΩ) (Equivalent Series Resistance) DC Resistance	Nominal Dimensions (mm)	Typical Mass (grams/piece)
300	XB3550-2R5307-R	6.0	7.0	Ø = 35; L = 50	69
400	XB3560-2R5407-R	4.0	4.5	Ø = 35; L = 60	80

Performance

Parameter	Capacitance Change (% of initial specified value)	ESR (% of initial specified value)
Life (1500 hrs @ maximum rated voltage and temperature)	≤ 20 %	≤ 200 %
Storage - Low and High Temperature (1500 hrs @ -40°C and 70°C)	≤ 20 %	≤ 200 %

COOPER Bussmann

Dimensions (mm)				
Part Number	D	L	H	A
XB3550-2R5307-R	35	53.0	6	22.5
XB3560-2R5407-R	35	63.0	6	22.5
Tolerances	± 1.0			± 0.1

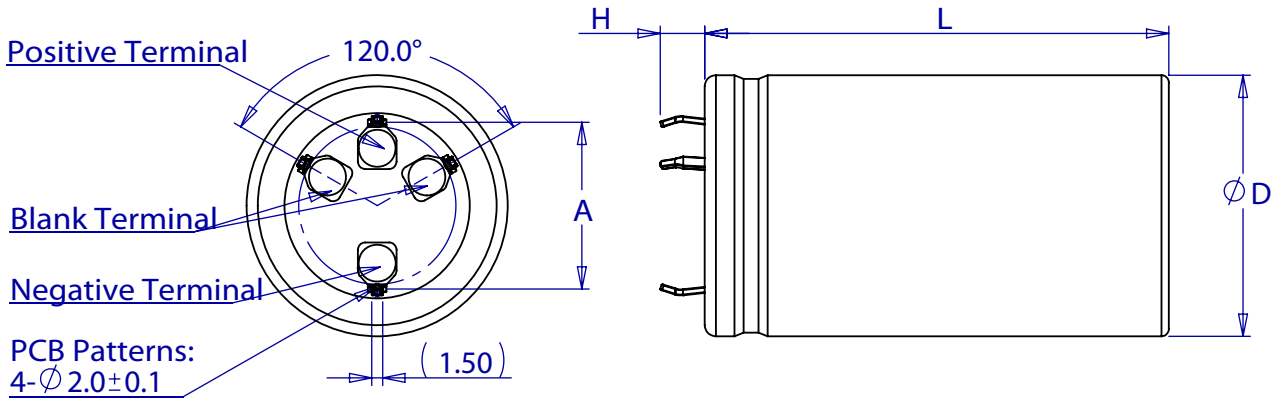

Part Numbering System											
XB	□	□	□	□	**-**	□ **R** □		□	□	□	**-R**
Series Code	**Dimensions**					**Voltage (V) R = Decimal**		**Capacitance (µF)**			
								Value	Multiplier		RoHS
XB = Series	Diameter		Length			2R5 = 2.5V		Example: 407 = 40 x 10^7µF or 400F			Compliant

Packaging Information

Standard packaging: 20 pieces per box

Part Marking

Manufacturer
Capacitance (F)
Nominal Working Voltage (V)
Series Code (or part number)
Polarity

North America
Cooper Bussmann
1225 Broken Sound Parkway NW
Suite F
Boca Raton, FL 33487-3533
Tel: 1-561-998-4100
Fax: 1-561-241-6640
Toll Free: 1-888-414-2645

Cooper Bussmann
P.O. Box 14460
St. Louis, MO 63178-4460
Tel: 1-636-394-2877
Fax: 1-636-527-1607

Europe
Cooper Bussmann
Cooper (UK) Limited
Burton-on-the-Wolds
Leicestershire • LE12 5TH UK
Tel: +44 (0) 1509 882 737
Fax: +44 (0) 1509 882 786

Cooper Bussmann
Avda. Santa Eulalia, 290
08223
Terrassa, (Barcelona), Spain
Tel: +34 937 362 812
+34 937 362 813
Fax: +34 937 362 719

Asia Pacific
Cooper Bussmann
1 Jalan Kilang Timor
#06-01 Pacific Tech Centre
Singapore 159303
Tel: +65 278 6151
Fax: +65 270 4160

The only controlled copy of this Data Sheet is the electronic read-only version located on the Cooper Bussmann Network Drive. All other copies of this document are by definition uncontrolled. This bulletin is intended to clearly present comprehensive product data and provide technical information that will help the end user with design applications. Cooper Bussmann reserves the right, without notice, to change design or construction of any products and to discontinue or limit distribution of any products. Cooper Bussmann also reserves the right to change or update, without notice, any technical information contained in this bulletin. Once a product has been selected, it should be tested by the user in all possible applications.

Life Support Policy: Cooper Bussmann does not authorize the use of any of its products for use in life support devices or systems without the express written approval of an officer of the Company. Life support systems are devices which support or sustain life, and whose failure to perform, when properly used in accordance with instructions for use provided in the labeling, can be reasonably expected to result in significant injury to the user.

© 2012 Cooper Bussmann
www.cooperbussmann.com

COILTRONICS® COOPER Bussmann® PowerStor®