stay connected

M12 male 90° / M12 female 90° A-cod.

PUR 4x0.34 bk UL/CSA+drag ch. 0.6m

Male 90° – female 90°
M12 – M12, 4-pole
Art-No. 7005 - M12 Lite - (plastic hexagonal screw) on request
Plastic housings with good resistance against chemicals and oils.
The resistance to aggressive media should be individually tested for your application. Further details on request.
Further cable lengths on request.

Link to Product

Illustration

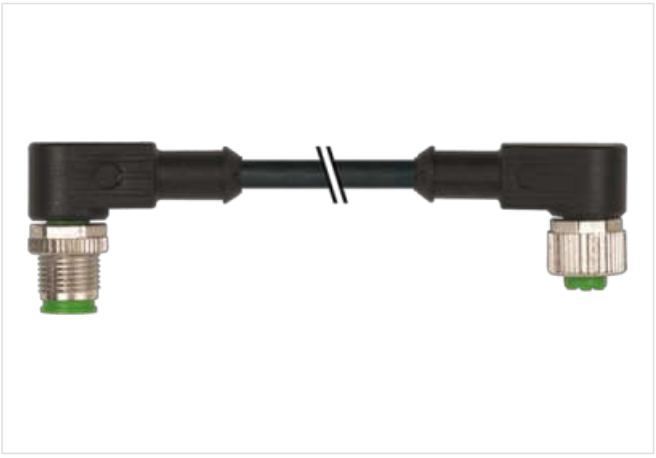

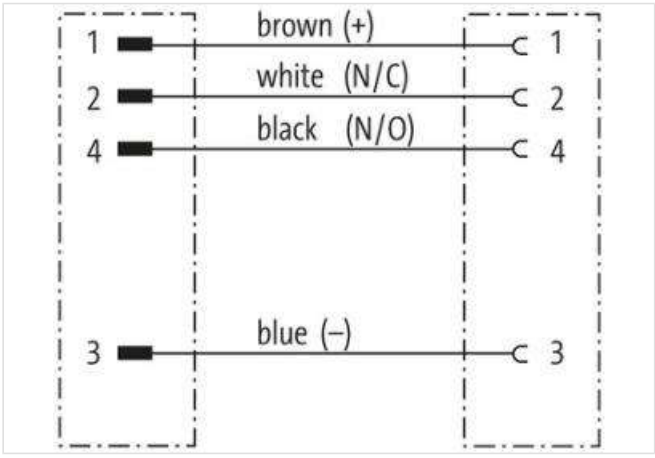

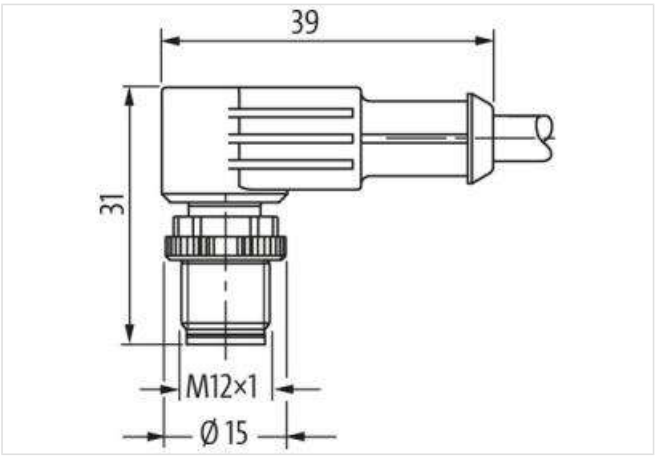

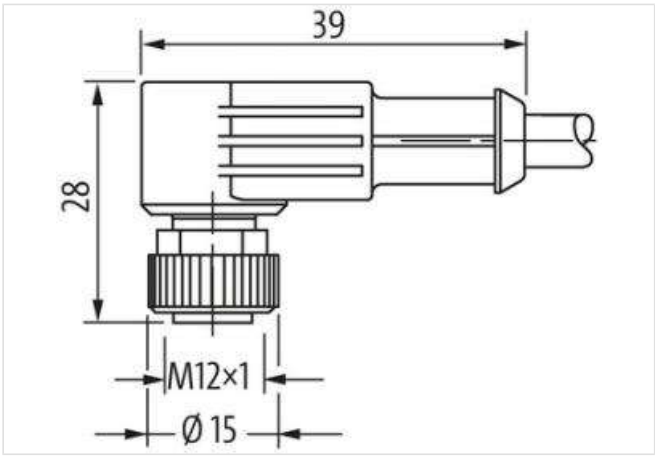

The information in this Product-PDF has been compiled with the utmost care.
Liability for the correctness completeness and topicality of the information is restricted to gross negligence. Version: 2024-01-31

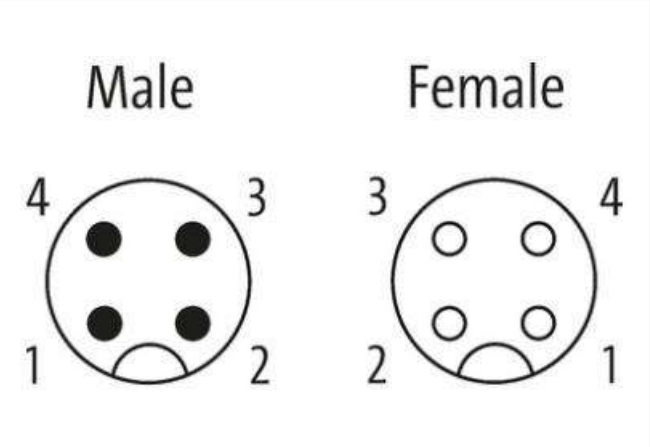

Product may differ from Image

Cable length	0,6 m
Side 1	
Tightening torque	0,6 Nm
Mounting method	inserted, screwed
Family construction form	M12
Thread	M12 x 1
suitable for corrugated tube (internal Ø)	10 mm
Coding	A
Material	PUR
Width across flats	SW13
Degree of protection (EN IEC 60529)	IP66K, IP67
Side 2	
Tightening torque	0,6 Nm
Mounting method	inserted, screwed
Family construction form	M12
Thread	M12 x 1
suitable for corrugated tube (internal Ø)	10 mm
Coding	A
Material	PUR
Width across flats	SW13
Degree of protection (EN IEC 60529)	IP66K, IP67
Commercial data	
ECLASS-6.0	27279218
ECLASS-7.0	27279218
ECLASS-8.0	27279218
ECLASS-9.0	27060311
ECLASS-10.1	27060311
ECLASS-11.1	27060311
ECLASS-12.0	27060311
ETIM-5.0	EC001855
customs tariff number	85444290
GTIN	4048879172493
Packaging unit	1

The information in this Product-PDF has been compiled with the utmost care.
Liability for the correctness completeness and topicality of the information is restricted to gross negligence. Version: 2024-01-31

MURR ELEKTRONIK
stay connected

Electrical data | Supply	
Operating voltage AC max.	250 V
Operating voltage DC max.	250 V
Operating voltage AC (UL-listed)	30 V
Operating voltage DC (UL-listed)	30 V
Current operating per contact max.	4 A
Installation | Connection	
Mounting set	M12 x 1
Device protection | Electrical	
Additional condition protection degree	inserted, screwed
Pollution Degree	3
Material group (IEC 60664-1)	I
Mechanical data | Material data	
Coating of fitting	nickel plated
Material screw connection	Zinc die-casting
Mechanical data | Mounting data	
Mounting method	inserted, screwed, Shaking protection
Environmental characteristics | Climatic	
Operating temperature min.	-25 °C
Operating temperature max.	85 °C
Additional condition temperature range	depending on cable quality
Conformities, approvals	
Product standard	DIN EN 61076-2-101 (M12)
Cable	
Cable identification	634
Cable Type	3 (PUR)
Approval (cable)	cURus (AWM-Style 20549/10493); CE conform
Cable weight [g/m]	36,3 g
Material wire	Cu wire, bare
Resistor (core)	max. 57 Ω/km (20 °C)
Single wire Ø (core)	0.1 mm
Construction (core)	42× 0.1 mm (multi-strand wire class 6)
Diameter (core)	4× 0.34 mm²
AWG	similar to AWG 22
Material wire isolation	PP
Material property wire insulation	CFC-, halogen-, cadmium-, silicone- and lead-free
Shore hardness wire isolation	70 ±5 D
Wire-Ø incl. isolation	1.25 mm ±5%
Color/numbering of wires	br, bk, bl, wh
Stranding combination	4 wires twisted
Shield	no
Material jacket	PUR
Material property (jacket)	CFC-, halogen-, cadmium-, silicone- and lead-free, matt, low-adhesion, machine easy to process, abrasion-resistant, hydrolysis and microbial resistant
Shore hardness jacket	90 ±5 A
Outer-Ø (jacket)	4.5 mm ±5%
Color jacket	black
chemical resistance	good resistance to oil, gasoline and chemicals (EN 60811-404)
thermal resistance	flame-retardant according to UL 1581 Section 1090 (H), CSA FT2 / IEC 60332-2-2
Nominal voltage	300 V AC
Test voltage	2500 V AC
Current load capacity	to DIN VDE 0298-4

The information in this Product-PDF has been compiled with the utmost care.
Liability for the correctness completeness and topicality of the information is restricted to gross negligence. Version: 2024-01-31

Temperature range (fixed)	-40...+80 °C, (+90 °C at max. 10 000 operating hours)
Temperature range (mobile)	-25...+80 °C, (+90 °C at max. 10 000 operating hours)
Bend radius (fixed)	5× outer Ø
Bend radius (moving)	10× outer Ø
No. of bending cycles (C-track)	max. 10 Mio. (25 °C)
Travel speed (C-track)	max. 3 m/s
Acceleration (C-track)	max. 10 m/s²
Torsion stress	±180°/m
No. of torsion cycles	max. 2 Mio. (25 °C)
Torsion speed	35 cycles/min

The information in this Product-PDF has been compiled with the utmost care.
Liability for the correctness completeness and topicality of the information is restricted to gross negligence. Version: 2024-01-31