

Image may differ from product. See technical specification for details.

# 7203 BECBM

## Single row angular contact ball bearing

These single row angular contact ball bearings can accommodate radial and axial loads acting simultaneously, where the axial load acts in one direction only. They can operate at high speeds and, depending on the variant, even very high speeds. They are more suitable than deep groove ball bearings for supporting large axial forces acting in one direction.

- High-speed capability
- Accommodate relatively high radial loads and large unilateral axial loads

# Overview

## Dimensions

| | |
|---|---|
| Bore diameter | 17 mm |
| Outside diameter | 40 mm |
| Width | 12 mm |
| Contact angle | 40 ° |

## Performance

| | |
|---|---|
| Basic dynamic load rating | 11 kN |
| Basic static load rating | 5.85 kN |
| Reference speed | 22 000 r/min |
| Limiting speed | 30 000 r/min |
| SKF performance class | SKF Explorer |

## Properties

| | |
|---|---|
| Contact type | Normal contact (two-point contact) |
| Number of rows | 1 |
| Locating feature, bearing outer ring | None |
| Ring type | One-piece inner and outer rings |
| Cage | Machined brass |
| Matched arrangement | No |
| Universal matching bearing | Yes |
| Axial internal clearance | Not applicable |
| Matched condition (axial clearance/ preload) | Axial clearance CB |
| Tolerance class | Class P6 (P6) |
| Material, bearing | Bearing steel |
| Coating | Without |
| Sealing | Without |
| Lubricant | None |
| Relubrication feature | Without |

## Logistics

| | |
|---|---|
| Product net weight | 0.0696 kg |

| | |
|---|---|
| eClass code | 23-05-08-03 |
| UNSPSC code | 31171531 |

## Technical specification

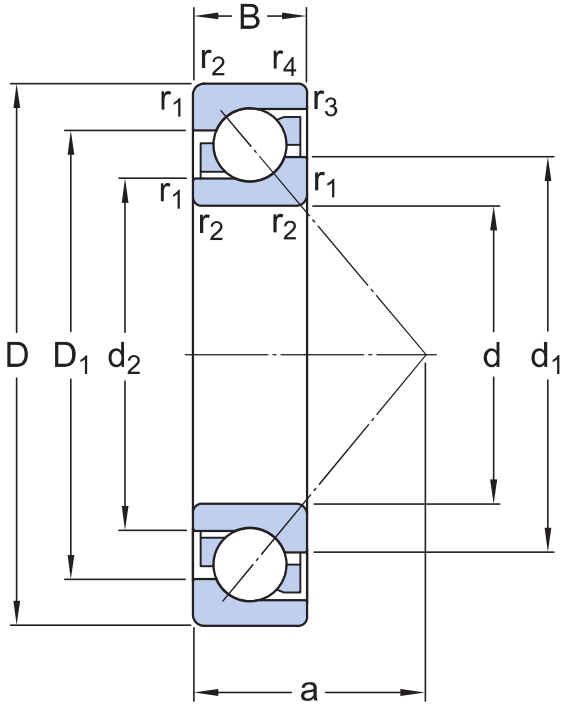


## Dimensions

| | | |
|---|---|---|
| d | 17 mm | Bore diameter |
| D | 40 mm | Outside diameter |
| B | 12 mm | Width |
| $d_1$ | ≈ 26.25 mm | Shoulder diameter of inner ring (large side face) |
| $d_2$ | ≈ 21.66 mm | Shoulder diameter of inner ring (small side face) |
| $D_1$ | ≈ 31.15 mm | Shoulder diameter of outer ring (large side face) |
| a | 18 mm | Distance side face to pressure point |
| $r_{1,2}$ | min. 0.6 mm | Chamfer dimension |
| $r_{3,4}$ | min. 0.6 mm | Chamfer dimension |

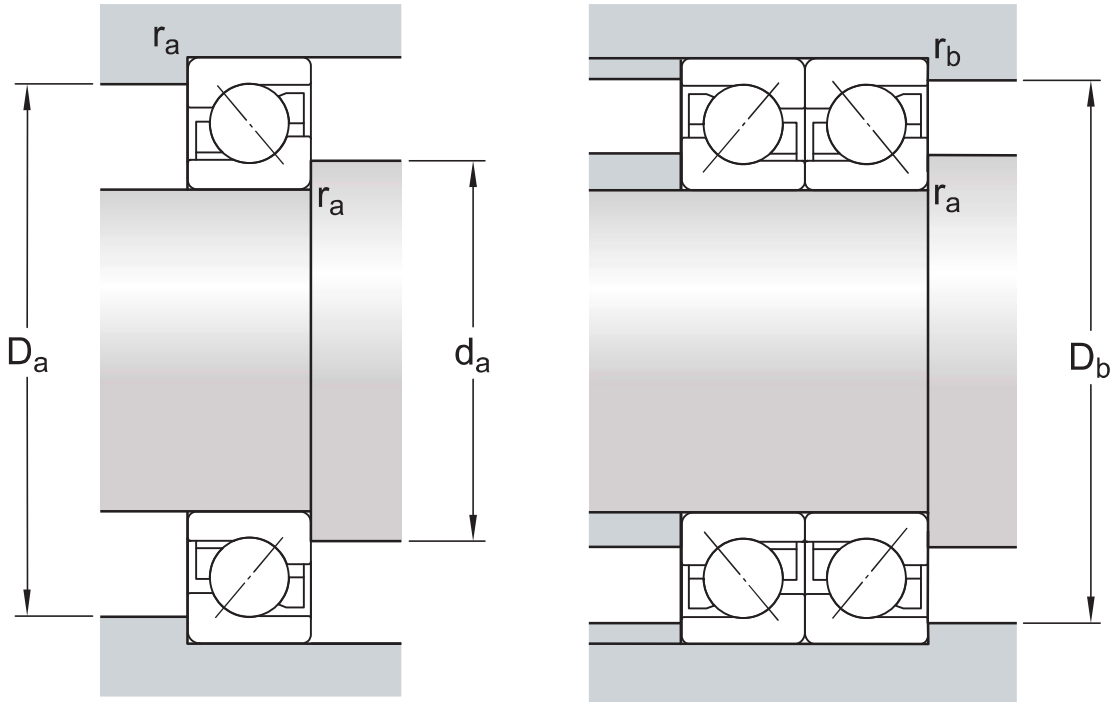


## Abutment dimensions

| | | |
|---|---|---|
| $d_a$ | min. 21.2 mm | Diameter of shaft abutment |
| $D_a$ | max. 35.8 mm | Abutment diameter housing |
| $D_b$ | max. 35.8 mm | Diameter of housing abutment |
| $r_a$ | max. 0.6 mm | Radius of fillet |
| $r_b$ | max. 0.6 mm | Radius of fillet |

## Calculation data

| | | |
|---|---|---|
| SKF performance class | | SKF Explorer |
| Basic dynamic load rating | C | 11 kN |
| Basic static load rating | $C_0$ | 5.85 kN |
| Fatigue load limit | $P_u$ | 0.25 kN |
| Reference speed | | 22 000 r/min |
| Limiting speed | | 30 000 r/min |
| Minimum axial load factor | A | 6.25E-4 |
| Minimum radial load factor | $k_r$ | 0.095 |
| Limiting value | e | 1.14 |

### SINGLE BEARING OR BEARING PAIR ARRANGED IN TANDEM

| | | |
|---|---|---|
| Calculation factor (single, tandem) | X | 0.35 |
| Calculation factor (single, tandem) | $Y_0$ | 0.26 |
| Calculation factor (single, tandem) | $Y_2$ | 0.57 |

### BEARING PAIR ARRANGED BACK-TO-BACK OR FACE-TO-FACE

| | | |
|---|---|---|
| Calculation factor (back-to-back, face-to-face) | X | 0.57 |
| Calculation factor (back-to-back, face-to-face) | $Y_0$ | 0.52 |
| Calculation factor (back-to-back, face-to-face) | $Y_1$ | 0.55 |
| Calculation factor (back-to-back, face-to-face) | $Y_2$ | 0.93 |

## Tolerances and clearances

### GENERAL BEARING SPECIFICATIONS

- Tolerances: Normal (metric), P6, P5, Normal (inch)
- Internal clearance: CA+CB+CC, G
- Preload: GA+GB+GC

## BEARING INTERFACES

- Seat tolerances for standard conditions
- Tolerances and resultant fit

## More Information

### Product details

- Designs and variants
- General bearing specifications
- Loads
- Temperature limits
- Permissible speed
- Design considerations
- Designation system

### Engineering information

- Principles of rolling bearing selection
- General bearing knowledge
- Bearing selection process
- Bearing interfaces
- Seat tolerances for standard conditions
- Selecting internal clearance or preload
- Lubrication
- Sealing, mounting and dismounting
- Bearing failure and how to prevent it

### Tools

- SKF Product select
- SimPro Quick
- Bearing Frequency Calculator
- LubeSelect for SKF greases
- Heater selection tool
- SKF mounting and dismounting instructions

# Terms of use

By accessing and using this website / app owned and published by AB SKF (publ.) (556007-3495 · Gothenburg) (“SKF”), you agree to the following terms and conditions:

**Warranty Disclaimer and Limitation of Liability**
Although every care has been taken to assure the accuracy of the information on this website / app, SKF provides this information "AS IS" and DISCLAIMS ALL WARRANTIES, EXPRESS OR IMPLIED, INCLUDING, BUT NOT LIMITED TO, IMPLIED WARRANTIES OF MERCHANTABILITY AND FITNESS FOR A PARTICULAR PURPOSE. You acknowledge that your use of this website / app is at your sole risk, that you assume full responsibility for all costs associated with use of this website / app, and that SKF shall not be liable for any direct, incidental, consequential, or indirect damages of any kind arising out of your access to, or use of the information or software made available on this website / app.

Any warranties and representations in this website / app for SKF products or services that you purchase or use will be subject to the agreed upon terms and conditions in the contract for such product or service.

Further, for non-SKF websites / apps that are referenced in our website / app or where a hyperlink appears, SKF makes no warranties concerning the accuracy or reliability of the information in these websites / apps and assumes no responsibility for material created or published by third parties contained therein. In addition, SKF does not warrant that this website / app or these other linked websites / apps are free from viruses or other harmful elements.

**Third Party Services**
When viewing YouTube content via the SKF website(s) (i.e. using YouTube API Services), you agree to be bound by the YouTube Terms of Service.

**Copyright**
Copyright in this website / app copyright of the information and software made available on this website / app rest with SKF or its licensors. All rights are reserved. All licensed material will reference the licensor that has granted SKF the right to use the material. The information and software made available on this website / app may not be reproduced, duplicated, copied, transferred, distributed, stored, modified, downloaded or otherwise exploited for any commercial use without the prior written approval of SKF. However, it may be reproduced, stored and downloaded for use by individuals without prior written approval of SKF. Under no circumstances may this information or software be supplied to third parties.

This website /app includes certain images used under license from Shutterstock, Inc.

**Trademarks and Patents**
All trademarks, brand names, and corporate logos displayed on the website / app are the property of SKF or its licensors, and may not be used in any way without prior written approval by SKF. All licensed trademarks published on this website / app reference the licensor that has granted SKF the right to use the trademark. Access to this website / app does not grant to the user any license under any patents owned by or licensed to SKF.

**Changes**
SKF reserves the right to make changes or additions to this website / app at any time.