

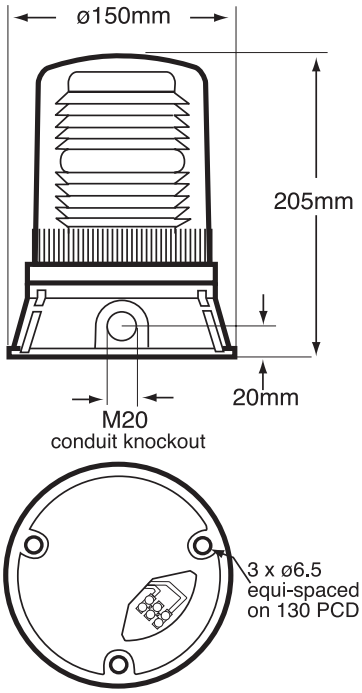

Industrial Xenon Beacons > X501/500 Series

Product overview

The X501/500 series are suitable for industrial signalling applications where a very powerful signal is required.

These beacons are of the Flashing mode type (single stage alarm) Xenon beacons (sometimes called strobes) are controlled via a PCB and put out a very brief but very bright flash of white light by ionizing and then discharging a large current through the xenon gas. The design allows for termination inside the enclosure.

This range of beacons incorporates an internal Fresnel lens designed to maximise the light intensity and has a double flash option (activated by a jumper link on the PCB) that extends the signal duration making it more noticeable to the human eye.

The DC unit is factory set at 24v but a jumper link on the PCB can change it to 12v operation. The DC version is also supplied with a bi-lateral current limiter that must be used on all installations to protect the PCB from inrush current damage. Due to the power rating of the beacon it is not recommended for use in excess of 12 hours in any 24 hour period.

X501/500 Series > Ordering Information

Code No:	Voltage:	Light Source:	Current:
X501-18 •	12/24v Dc ---	Xenon 24J / 18J	2.30 / 1.30 A
X500-21	115v Ac ~	Xenon 24J / 18J	0.65 A
X500-22	230v Ac ~	Xenon 24J / 18J	0.40 A

• Pre-set at 24v Dc ---

ADD THE FOLLOWING LENS CODES TO THE PRODUCT WHEN ORDERING **01** **02** **03** **04** **05**

Features

- Rated use only
- Very high light output
- Suitable for surface or wall mounting
- Optional wall bracket & guard available - see accessories
- 3 point fix
- M20 side entry or bottom cable entry
- 360º light output around the vertical axis
- 180º light output above the horizontal axis
- Dustproof and Weatherproof

Material

UV Stable Polycarbonate Lens

UV Stable ABS Plastic Base

Kg 1.25 | 50/60 **Hz** | **°C** -25+35 | **IP** 65 | **FPM** 60x90 | **INDUSTRIAL**

APPROVALS and CONFORMITIES

RoHS