Micro installation beacon / LED Beacon 230

LED Perm. Beacon EM 12VDC YE



Part No.: 230.300.54

MECHANICAL DATA	
Height	154 mm
Diameter	29 mm
Materials	PC PC/ABS
Dome colour	Yellow
Housing colour	Black
Protection category	IP65
Connection	Stranded wires (tinned) Stranded wires with ferrules
Cable length	115 mm
Type of fixing	Built-in mounting
Working temperature minimum	-20°C
Working temperature maximum	+50°C
Weight with packaging	17 g
Product weight	12 g

ELECTRICAL DATA	
Operating voltage	12V
Operating voltage type	DC
Operating voltage tolerance	+/- 10%
Rated operational voltage	12 VDC
Rated operational current	80 mA
Rated inrush current	500 mA
Protection class	Protection class 2
Pollution degree	3 In the connection area: 2

OPTICAL DATA	
Light source	LED
Light colour	Yellow
Optical signal image	Permanent
Service life optical	100,000 h maximum

APPROVAL DATA	
Conforms with CE	Yes
WEEE	Yes
Conforms with ATEX-directive	No
Conforms with CCC	No
Conforms with UL	cULus
UL Type Rating	Type 12

! For additional installation and mounting information, refer to the appropriate user guide at www.werma.com. This printed copy is for information only and is subject to alteration.

Micro installation beacon / LED Beacon 230

LED Perm. Beacon EM 12VDC YE

Conforms with FCC	No
Conforms with IC	No
EAC certificate available	Yes
Conforms with AS-I	No
ICAO Certification	No
Conforms with DNV	No
Conforms with RoHS CN	No
Conforms with VdS	No

DRAWING

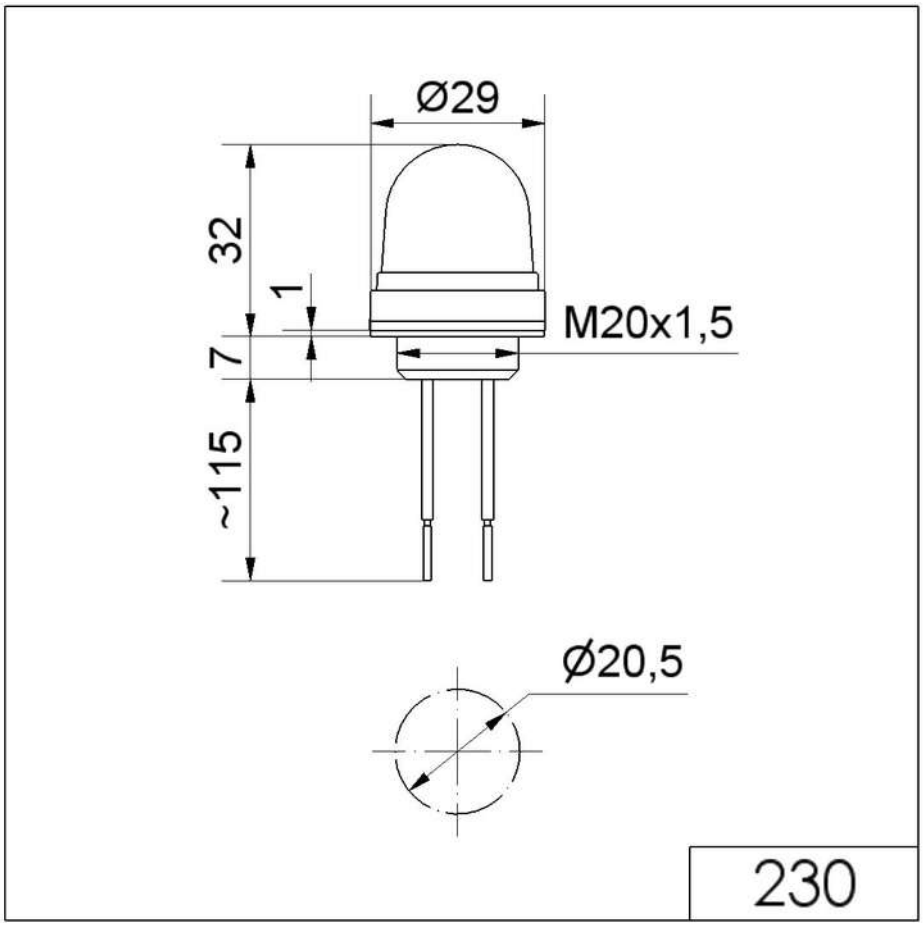

! For additional installation and mounting information, refer to the appropriate user guide at www.werma.com. This printed copy is for information only and is subject to alteration.