stay connected

MOSA M8 female 0° field-wireable (IDC)

4-pol., 0,25-0,5mm²

Insulation displacement technology IDC
Female straight
M8, 4-pole
Connection cross section: 0.25...0.5 mm²

Link to Product

Illustration

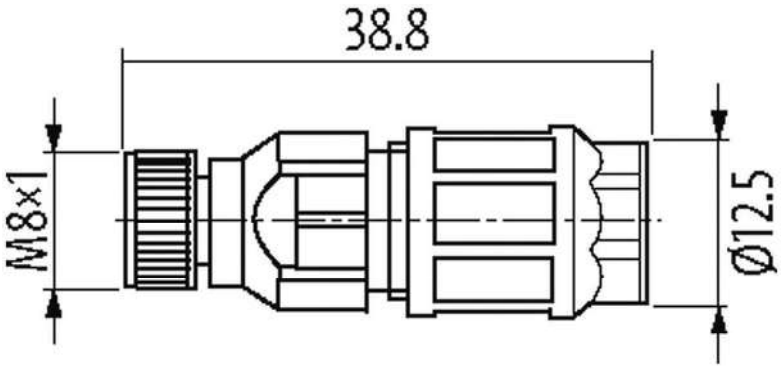

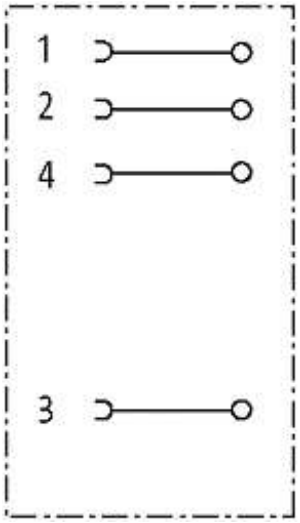

The information in this brochure has been compiled with the utmost care.
Liability for the correctness completeness and topicality of the information is restricted to gross negligence. Version: 04/19

MURR ELEKTRONIK
stay connected

Female

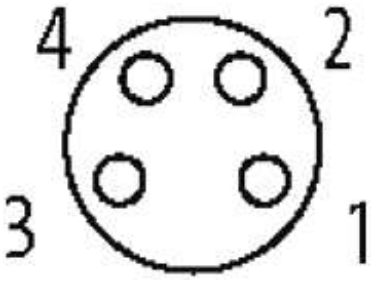

Product may differ from Image

Approvals

Technical Data

Operating voltage	30 V AC/DC
Operating current per contact	max. 4 A
No. of poles	4
Over voltage category	2
Isolation resistance	≥ 100 MΩ
Connection cross section	0.25...0.5 mm²
Sealing range (cable Ø)	2.5...5.0 mm
Outer wire Ø	1.1...1.55 mm
Compression gland	Hexagonal screw/nut
Protection	IP65 and IP67 when plugged and screwed down (EN 60529)
Material	PA
Locking material	Zinc die casting, matte nickel plated
Mating cycles	≥ 100
Reconnection (cable)	10

General data

Standards	DIN EN 61076-2-104 (M8)
Connection	IDC terminal
Mounting method	inserted, tightened
Material (contact carrier)	TPU
Material (contact)	Copper alloy
Material (contact surface)	Au
Material (gasket)	NBR

The information in this brochure has been compiled with the utmost care.
Liability for the correctness completeness and topicality of the information is restricted to gross negligence. Version: 04/19

Pollution Degree	3
Temperature range	-25...+80 °C

Commercial data

country of origin	DE
customs tariff number	85366990
EAN	4048879784818
eClass	27279221
Packaging unit	1

The information in this brochure has been compiled with the utmost care.
Liability for the correctness completeness and topicality of the information is restricted to gross negligence. Version: 04/19