lumbergautomation
A BELDEN BRAND



Product: RKC 120/13,5

M23 Power Field Attachable Connector: Female, straight, 12-pin, silver housing, 120 V AC/DC

Product Description

M23 Power Field Attachable Connector: Female, straight, 12-pin, silver housing, 120 V AC/DC

Technical Drawing

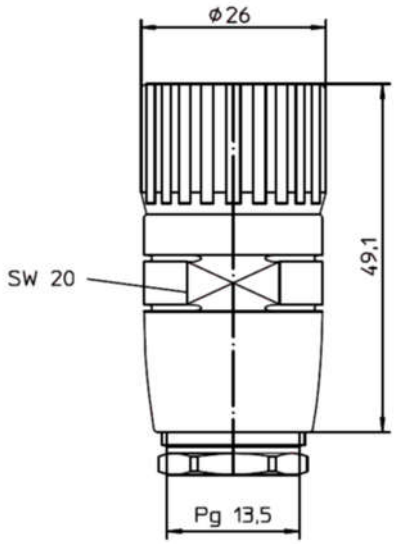

Typ/ *type*	Polzahl/ *number of poles*	
RKC 120	12	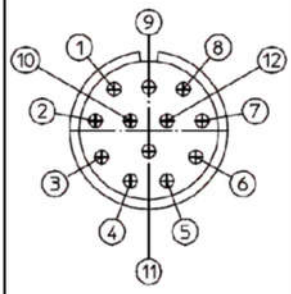
RKC 190	19	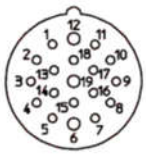

Technical Specifications

Technical Data

Product Family:	Power Connector
Product Sub Family:	M23 Power
Brand:	Lumberg Automation
Connector Type:	Field attachable
Type of Contact / Gender:	female
Connector Design:	straight
Number of Pins:	12
Shielding:	Unshielded
Attachment Type:	Coupling Nut
Rated Voltage:	125 V
Rated Impulse Voltage:	1.5 kV
Operating Voltage:	120 V AC/DC
Rated Current:	8 A

Insulation Resistance:	> 10^9 Ohm
Mating Cycles:	≤ 100
Type of Connection:	solder
Cable Gland:	PG 13.5
Conductor Cross Section:	max. 1.0 mm²
Suitable Cables:	Ø10 mm to Ø14 mm
Ambient Temperature (Operation):	-40°C to +125°C
Protection Degree / IP Rating:	IP65
Pollution Degree:	3 acc. to DIN EN 60664-1 (VDE 0110-1)

Materials

Contact Base Material:	CuZn
Contact Plating:	Cu/Au
Contact Bearer Material:	PBT
Contact Bearer Color:	white
Flammability Class (Contact Bearer):	UL 94 V0
Housing Material:	CuZn
Housing Color:	silver
Attachment Material:	CuZn, nickel-plated
O-Ring Material:	FPM / NBR

Safety & Environmental Compliance

RoHS Compliant:	yes

Notes

Protection Degree / IP Rating Note:	* only if mounted and locked in combination with Hirschmann / Lumberg connector.
Note Derating:	* Notice derating
Note:	Do not connect / disconnect under load.
Particularities:	When the connector is unlocked and in risk of pollution the connector has to be covered with a protective cap ≥ IP54.

Variants

Item #	Item Description
2054	RKC 120/13,5

© 2019 Belden, Inc

All Rights Reserved.

Although Belden makes every reasonable effort to ensure their accuracy at the time of this publication, information and specifications described here in are subject to error or omission and to change without notice, and the listing of such information and specifications does not ensure product availability.

Belden provides the information and specifications herein on an "ASIS" basis, with no representations or warranties, whether express, statutory or implied. In no event will Belden be liable for any damages (including consequential, indirect, incidental, special, punitive, or exemplary damages) whatsoever, even if Belden has been advised of the possibility of such damages, whether in an action under contract, negligence or any other theory, arising out of or in connection with the use, or inability to use, the information or specifications described herein.

All sales of Belden products are subject to Belden's standard terms and conditions of sale.

Belden believes this product to be in compliance with all applicable environmental programs as listed in the data sheet. The information provided is correct to the best of Belden's knowledge, information and belief at the date of its publication. This information is designed only as a general guide for the safe handling, storage, and any other operation of the product itself or the one that it becomes a part of. The Product Disclosure is not to be considered a warranty or quality specification. Regulatory information is for guidance purposes only. Product users are responsible for determining the applicability of legislation and regulations based on their individual usage of the product.