16 Compression Latch

Self-adjusting · Cam indicator · Knob actuated · Single hole mount



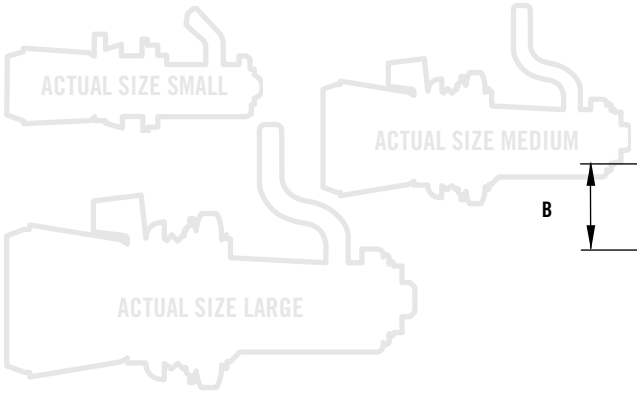

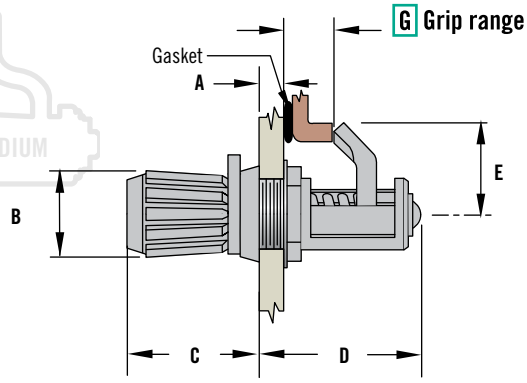

Size	G Grip Range		Part Number
	Min.	Max.	
Small	3.2 (.12)	10.3 (.41)	16-10-511-16
Medium	1.6 (.06)	8.7 (.34)	16-10-411-14
	7.1 (.28)	14.3 (.56)	16-10-412-14
Large	1.6 (.06)	12.7 (.50)	16-10-311-14
	9.5 (.37)	20.6 (.81)	16-10-312-14

Size	A. Max.	B	C	D	E
Small	2.4 (.09)	9.9 (.39)	15.5 (.61)	18.3 (.72)	10 (.40)
Medium	2.4 (.09)	13.5 (.53)	17.3 (.68)	23.4 (.92)	19 (.75)
Large	4.8 (.190)	19 (.75)	21.8 (.86)	32.9 (1.3)	23 (.91)

- **Three sizes available**
- **Easy grip adjustment**

Material and Finish

Steel, zinc plated

Performance Details

Small: Working load: 135 N (30 lbf)

Medium: Working load: 220 N (50 lbf)

Large: Working load: 335 N (75 lbf)

Other options available. For complete details on variety, part numbers, installation and specification, go to

INFO CLIC *www.southco.com/16*

43 · 44 · 14 Compression Latches

Self-adjusting · Three hole mount



44 · Medium size series

Material	G Grip Range		Knurled Head	Slotted Head
	Min.	Max.		
Steel	3.2 (.12)	9.5 (.37)	44-1-1-0	44-1-16-0
	9.5 (.37)	19.1 (.75)	44-1-2-0	44-1-17-0
	19.1 (.75)	28.6 (1.12)	44-1-3-0	44-1-18-0
Stainless steel	3.2 (.12)	9.5 (.37)	44-1-1-24	44-1-16-24
	9.5 (.37)	19.1 (.75)	44-1-2-24	44-1-17-24
	19.1 (.75)	28.6 (1.12)	44-1-3-24	44-1-18-24

Also available: Tool recess, Slotted, Hex recess

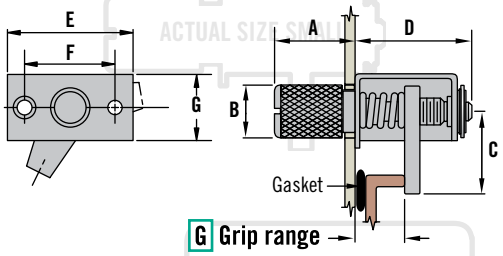

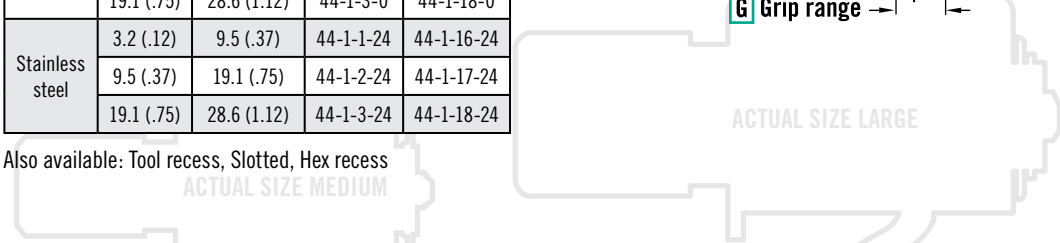

Size	A	B	C	D	E	F	G
Small 43	15.1 (.59)	8.9 (.35)	15.9 (.63)	22.2 (.88)	28.6 (1.13)	20.6 (.81)	13.9 (.55)
Medium 44	23.8 (.94)	14.6 (.57)	25.4 (1.0)	32.1 (1.27)	44.5 (1.75)	31.8 (1.25)	22.2 (.88)
Large 14	28.6 (1.13)	22.7 (.90)	34 (1.34)	44.5 (1.75)	63.5 (2.5)	47.6 (1.87)	33.3 (1.31)

- **Three sizes available**
- **Three hole installation**
- **Easy grip adjustment**

Material and Finish

Steel, zinc plated or stainless steel

Performance Details

Working Load:

43 Small: 330 N (75 lbf)

44 Medium: 490 N (110 lbf)

14 Large: 670 N (150 lbf)

Other options available. For complete details on variety, part numbers, installation and specification, go to

INFO CLIC *www.southco.com/43*
www.southco.com/44
www.southco.com/14

Dimensions in millimeters (inch) unless otherwise stated

Southco® Compression Latches

Small Size

- **Three-hole mount**
- **An extra turn adjusts the amount of compression applied**
- **Two actuation styles including hand and tool-operated**



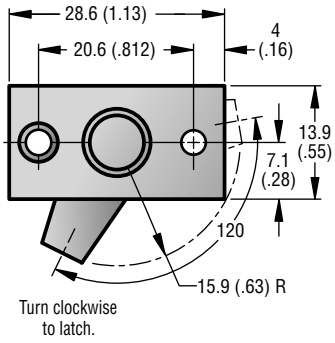

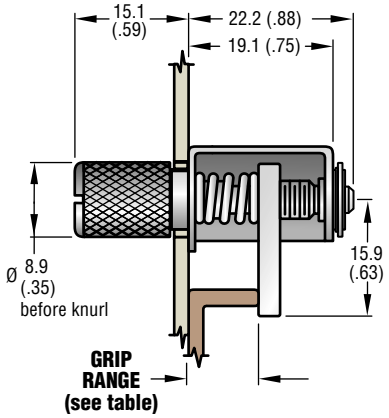

Head styles:

Slotted knurled head

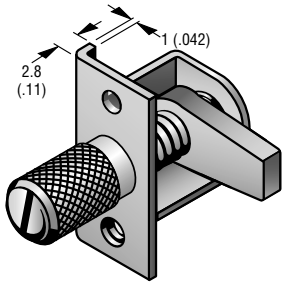

Slotted flush head

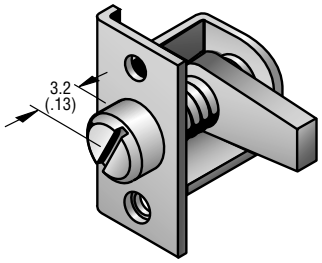

Pawl style and position (pre-assembled) determines grip range (see table).

STYLE	GRIP RANGE		PART NUMBERS	Pawl position
	MIN.	MAX.		
Slotted knurled head	3.2 (.125)	7.1 (.281)	43-1-**4**-0 •	A
	6.4 (.250)	13.5 (.531)	43-1-**5**-0 •	B
	12.7 (.500)	19.8 (.781)	43-1-**6**-0	C
Slotted flush head	3.2 (.125)	7.1 (.281)	43-1-**13**-0 •	A
	6.4 (.250)	13.5 (.531)	43-1-**14**-0 •	B
	12.7 (.500)	19.8 (.781)	43-1-**15**-0 •	C

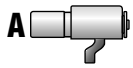

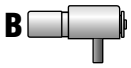

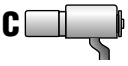

Panel preparation

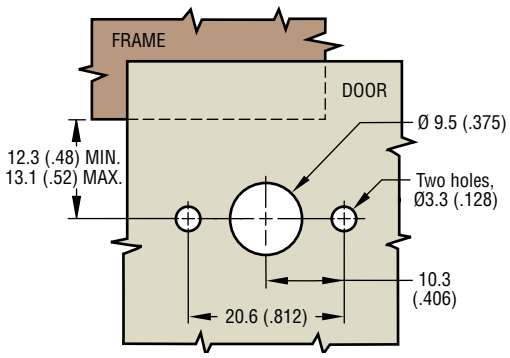

Material and Finish

PAWL and RETAINING WASHER: 1010 Steel.
BUSHING: 12L14 Steel.
The components listed above are zinc plated chromate plus sealer.
SPRING: 17-7PH Stainless steel, passivated.
CONICAL SPRING: 302 Stainless steel, passivated.
HOUSING: 1010 Steel, zinc plate, chromate plus sealer.
SCREW: 12L14 Steel, zinc plate, chromate plus sealer.

Installation

1. Prepare door.
2. Pass knob of latch through center hole and secure with two rivets or screws.

Product Strength Guidelines

(To assist in your product selection; samples are available for your evaluation.)

Maximum static load: 330 N (75 lbs.)
Average ultimate load: 600 N (135 lbs.)

millimeter (inch)
millimeter
(inch)
Dimensions without tolerances are for reference only.

Southco® Compression Latches

Medium Size

- **Three-hole mount**
- **An extra turn adjusts the amount of compression applied**
- **Seven actuation styles including hand-, tool-, and key-operated**
- **Corrosion-resistant assemblies available**
- **Optional trimplate conceals mounting hardware**

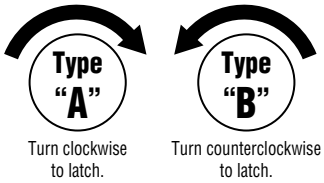

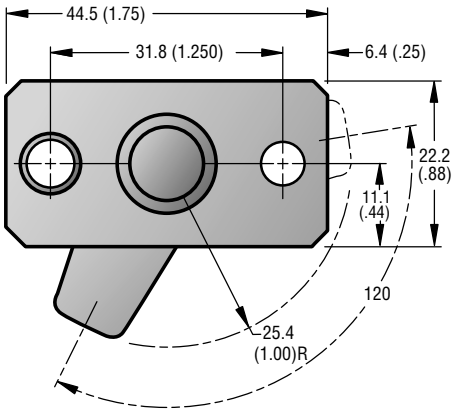

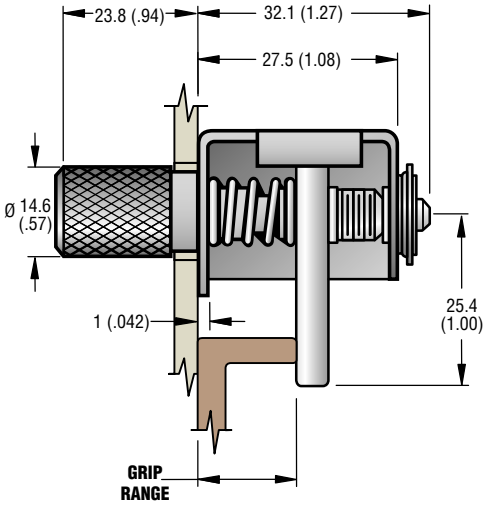

STYLE	Door Thickness	GRIP RANGE		PART NUMBERS			Pawl position
				Steel		Stainless steel, passivated	
		MIN.	MAX.	Type "A"	Type "B"	Type "A"	
Black nylon knob	1.2 (.046) to 2.8 (.109)	3.2 (.125)	9.5 (.375)	44-99-**116**-11 •	—	—	A
		9.5 (.375)	19.1 (.750)	44-99-**116**-12 •	—	—	B
		19.1 (.750)	28.6 (1.125)	44-99-**116**-13 •	—	—	C
	2.8 (.109) to 4.4 (.172)	3.2 (.125)	9.5 (.375)	44-99-**119**-11 •	—	—	A
		9.5 (.375)	19.1 (.750)	44-99-**119**-12	—	—	B
		19.1 (.750)	28.6 (1.125)	44-99-**119**-13 •	—	—	C
Low profile black knob	0.8 (.03) to 6.4 (.25)	3.2 (.125)	9.5 (.375)	44-1-**34**-0 •	—	—	A
		9.5 (.375)	19.1 (.750)	44-1-**35**-0 •	—	—	B
		19.1 (.750)	28.6 (1.125)	44-1-**36**-0	—	—	C
Knurled head	—	3.2 (.125)	9.5 (.375)	44-1-**1**-0 •	—	44-1-**1**-24 •	A
		9.5 (.375)	19.1 (.750)	44-1-**2**-0 •	—	44-1-**2**-24 •	B
		19.1 (.750)	28.6 (1.125)	44-1-**3**-0 •	—	44-1-**3**-24 •	C
Hex-socket head 4 mm (.157 in.)	—	3.2 (.125)	9.5 (.375)	44-1-**22**-0 •	—	—	A
		9.5 (.375)	19.1 (.750)	44-1-**23**-0 •	—	—	B
		19.1 (.750)	28.6 (1.125)	44-1-**24**-0 •	—	—	C
Slotted flush head	—	3.2 (.125)	9.5 (.375)	44-1-**16**-0 •	44-10-**16**-0 •	44-1-**16**-24 •	A
		9.5 (.375)	19.1 (.750)	44-1-**17**-0 •	44-10-**17**-0 •	44-1-**17**-24 •	B
		19.1 (.750)	28.6 (1.125)	44-1-**18**-0 •	44-10-**18**-0 •	44-1-**18**-24 •	C
Toolhead Recess	—	3.2 (.125)	9.5 (.375)	44-T-**1** •	—	—	A
		9.5 (.375)	19.1 (.750)	44-T-**2** •	—	—	B
		19.1 (.750)	28.6 (1.125)	44-T-**3** •	—	—	C
Keylocking*	1.07 (.042) to 2.36 (.093)	3.2 (.125)	9.5 (.375)	44-99-222-**71** •	—	—	A
		9.5 (.375)	19.1 (.750)	44-99-222-**72** •	—	—	B
		19.1 (.750)	28.6 (1.125)	44-99-222-**73** •	—	—	C

Pawl Style and Position

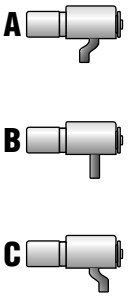

*(Locks are keyed alike. Different keycodes available. Contact Southco for details.)

• Products identified with this symbol are stocked subject to prior sale in one or more of our global locations. If unavailable from our facility nearest you, allow for shipping time from another facility.

Head Styles:

Black nylon knob

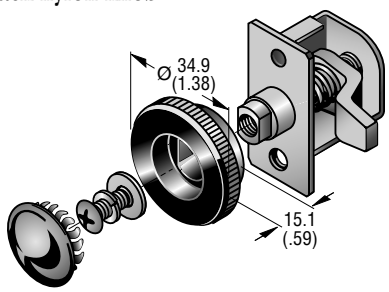

Low-profile black knob

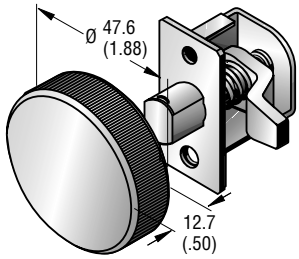

Knurled

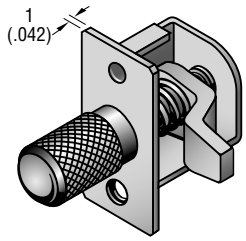

Hex-socket

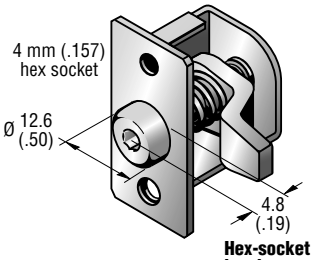

Hex-socket head

Slotted Flush

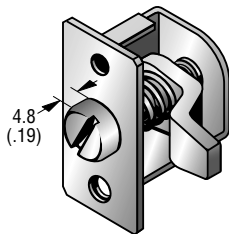

Toolhead Recess

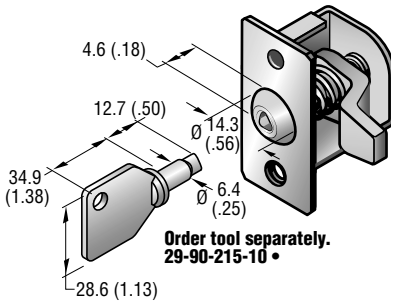

Order tool separately.
29-90-215-10 •

Keylocking

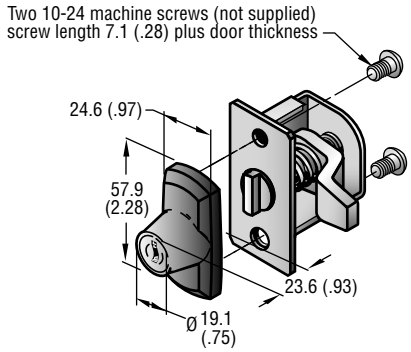

Trimplate

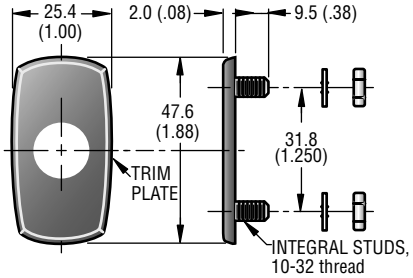

Trimplate Part Number
44-30-101-10 •

Trimplate Installation

NOTE: Mounting Trimplates can be used with all medium adjustable grip latch styles EXCEPT keylock styles.
Two nuts and two lockwashers are supplied.
Maximum recommended tightening torque for mounting nuts: 2.8 N•m (25 in. -lbs.)



Material and Finish

PAWL, HOUSING and RETAINING WASHER: 1010 Steel, zinc plate chromate plus sealer or 304 stainless steel, passivated. BUSHING and SCREW: 12L14 Steel, zinc plate chromate plus sealer or 303 stainless steel, passivated.
SPRING and CONICAL SPRING: 302 Stainless steel, passivated.
For models with black knobs:
KNOB: Nylon, black.
For models with hex socket:
SCREW: 12L14 Steel, zinc plate, chromate plus sealer.
For Trimplate:
PLATE: 1010 Steel, phosphate dip plus black powder coated. STUDS: 10B21 Steel, phosphate dip. NUTS: Steel, zinc plate, chromate plus sealer. LOCKWASHERS: Spring steel, zinc plate, chromate plus sealer.
For Keylocking models:
LOCK HOUSING: Die-cast zinc, black powder coated.
LOCK PLUG: Die-cast zinc, black powder coated to match lock housing.
KEYS: Brass, nickel plated.

Product Strength Guidelines

(To assist in your product selection; samples are available for your evaluation.)
Maximum static load: 490 N (110 lbs.)
Average ultimate load: 1070 N (240 lbs.)

Operating Temperature Range:
-20°C (0°F) to 80°C (180°F)

Flammability Rating (KNOB): UL94-HB

Panel preparation

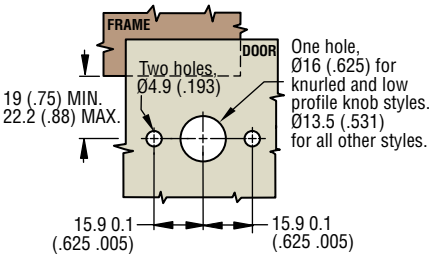

Installation

1. Prepare door.
2. Pass knob of latch through center hole and secure with two rivets or screws.

millimeter (inch)
millimeter
(inch)
Dimensions without tolerances are for reference only.

Southco® Compression Latches

Large Size

- **Three-hole mount**
- **An extra turn adjusts the amount of compression applied**
- **Three actuation styles including hand- and tool-operated**

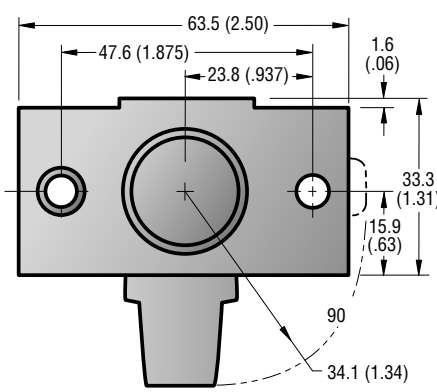

Turn Clockwise to latch.

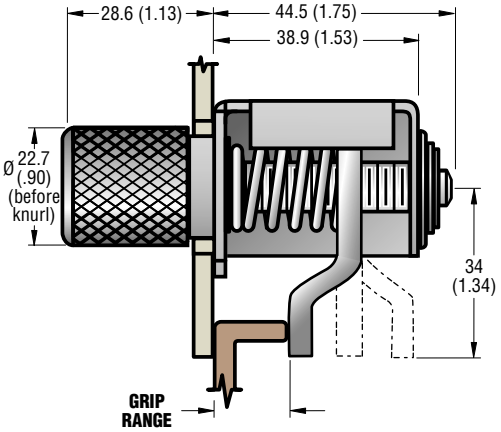



Material and Finish

PAWL: 1010 Steel, zinc plate, chromate plus sealer.
RETAINING WASHER: 1010 Steel.
BUSHING: 12L14 Steel. These components are zinc plated chromate plus sealer.
SPRING, CONICAL SPRING: 302 Stainless steel, passivated.
HOUSING: 1010 Steel, zinc plate, chromate plus sealer.
SCREW: 12L14 Steel, zinc plate, chromate plus sealer.
For model with hex socket
SCREW: 12L14 Steel, zinc plate, chromate plus sealer.

Head Styles:

Knurled knob

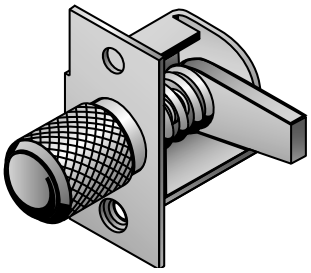

Slotted flush head

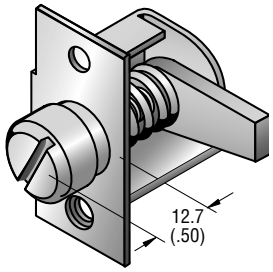

Hex socket

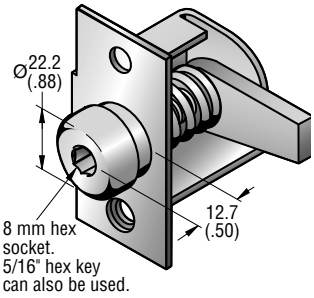

Panel preparation

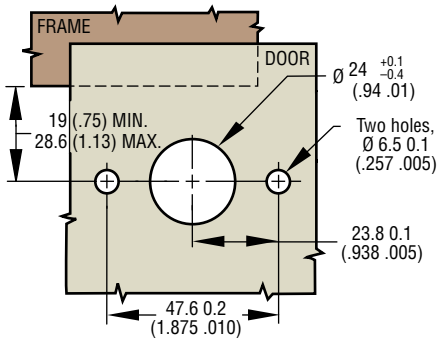

Style	Grip range		PART NUMBERS	Pawl position
	MIN.	MAX.		
Knurled head	3.2 (.13)	19 (.75)	14-10-11-11 •	A
	9.5 (.38)	31.8 (1.25)	14-10-13-11 •	B
	22.2 (.88)	42.9 (1.69)	14-10-14-11 •	C
Hex-socket head	3.2 (.13)	19 (.75)	14-10-91-11 •	A
	9.5 (.38)	31.8 (1.25)	14-10-93-11 •	B
	22.2 (.88)	42.9 (1.69)	14-10-94-11 •	C
Slotted flush head	3.2 (.13)	19 (.75)	14-10-71-11 •	A
	9.5 (.38)	31.8 (1.25)	14-10-73-11 •	B
	22.2 (.88)	42.9 (1.69)	14-10-74-11 •	C

Pawl style and position

(pre-assembled) determines grip range (see table).

A

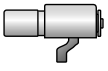

B

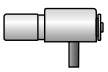

C

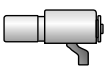

Installation

1. Prepare door.
2. Pass knob of latch through center hole and secure with two rivets or screws.

Product Strength Guidelines

(To assist in your product selection; samples are available for your evaluation.)

Maximum static load: 670 N (150 lbs.)
Average ultimate load: 1400 N (315 lbs.)

millimeter (inch)
millimeter
(inch)
Dimensions without tolerances are for reference only.

• Products identified with this symbol are stocked subject to prior sale in one or more of our global locations. If unavailable from our facility nearest you, allow for shipping time from another facility.