VARIMETER PRO
Multifunction Measuring Relay
MK 9300N, MH 9300

0268581



Product Description

The universal measuring relays MK 9300N / MH 9300 of the VARIMETER PRO series monitor up to 9 parameters simultaneously. These are under-, over-voltage, voltage range, voltage asymmetry, under-, overcurrent, cos phi, effective-, apparent- and reactive power, frequency and phase sequence, The measurement in 3-phase or single-phase systemes is very simple and without extensiv wiring. Because of the menue structure the multifunctional measuring relays can be used easyly and intuitively.
The early detection of up-coming break downs and preventive maintenance avoid expensive damages. As user you profit from the reliability and availability of your plant.

Function Diagram

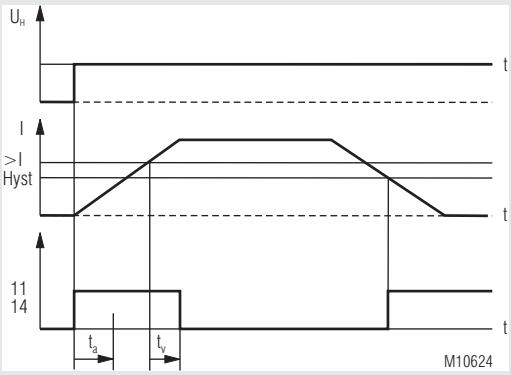

Example: overvoltage monitoring with closed circuit operation

Your Advantage

- Min-, Max. value or window monitoring
- Simultaneous monitoring of up to 9 different parameters
- Simple configuration and fault diagnostic
- Different fault indications
- Large measuring range 3 AC 24 ... 690 V
- Auxiliary voltage ranges DC 24 V, AC 230 V or AC/DC 110 ... 400 V
- Early detection of irregular states
- Space and cost saving
- Reduced wiring

Features

- Multifunction measuring relay acc. to EN 60255-1
- Voltage monitoring (1- and 3-phase)
- Current monitoring
- Frequency monitoring
- Power factor cos phi
- Phase sequence, phase failure, asymmetry
- Effective-, reactive- and apparent power
- Start up delay, on delay
- Adjustable hysteresis 0.2 ... 50 % of response value
- Manual reset
- LCD for indication of the measuring values

- Relay output
  MK 9300N: 1 changeover contact
  MH 9300: 2 x 1 changeover contacts
- Relay function selectable (energized/de-energized on trip)
- As option with plugable terminal blocks for easy exchange of devices
  - with screw terminals
  - or with cage clamp terminals
- MK 9300N: Width 22,5 mm
  MH 9300: Width 45 mm

More Information

- **MK 9300N**
  The MK9300N has 1 relay output.
  Monitoring parameters can be set independently

- **MH 9300**
  The MH 9300 has 2 relay outputs.
  Monitoring parameters can be set independently
  Each monitoring function can be assigned ro relay 1 and /or relay 2

Approvals and Markings

Applications

- Monitoring of single and 3-phase loads
- Emergency power supplies
- Voltage dependent switching at under- or overvoltage
- Voltage monitoring of portable equipment
- Motor protection on Phase failure
- Transformer protection on asymmetric load
- Frequency monitoring on inverter outputs

All technical data in this list relate to the state at the moment of edition. We reserve the right for technical improvements and changes at any time.

Circuit Diagrams

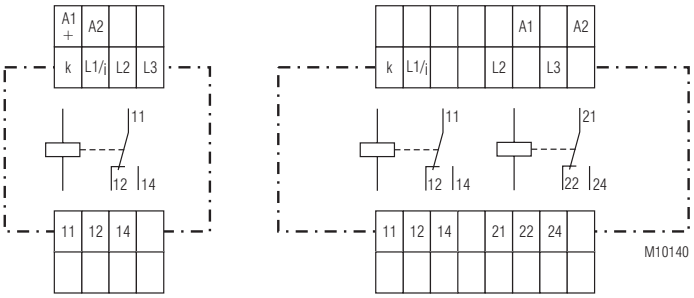

MK 9300N.11 MH 9300.12

Connection Terminals

Terminal designation	Signal description
A1 (+), A2	Auxiliary voltage AC or DC
L1/i, L2, L3	Voltage measuring input AC
L1/i , k	Current measuring path AC
11, 12, 14	Indicator relay (C/O contact)
21, 22, 24	Indicator relay (C/O contact)

Function

After connecting the auxiliary supply to terminals A1-A2 the startup delay disables the monitoring function so that changes on the input have no influence on the relay output of the VARIMETER PRO. The device is in display (RUN) mode and continuously measures the actual values. The buttons ⇧ and ⇩ toggle between the different values. Pressing Esc for more than 3 sec starts the input mode.

One or more measuring values can be assigned to the relay output. If the setting value of at least one function is exceeded the relay switches and the display indicates this state. The display is inverted, flashes and shows measuring function and fault.

The fault memory is selectable
With button ↵ the fault memory can be deleted.

On the unit MH 9300 it is possible to assign different values to the different relays so one can be used as pre-warning and the other as alarm output. Relay output 1 switches when actual value exceeds the pre-warning setting of at least one assigned measuring function.
If a second setting assigned to relay output 2 with the same measuring function the unit gives an Alarm signal.

Remarks

To provide correct function the measuring voltage on L1/L2 has to be at least 20 V.

Due to the measuring principle a symmetric load on all 3 phases as you have it usually with motors.

The unit can also be used for single phase monitoring by bridging terminals L2 and L3. The display shows U instead of U_{min} / U_{max}.

Overload within the current range is indicated by fast flashing of the LED.

Setting

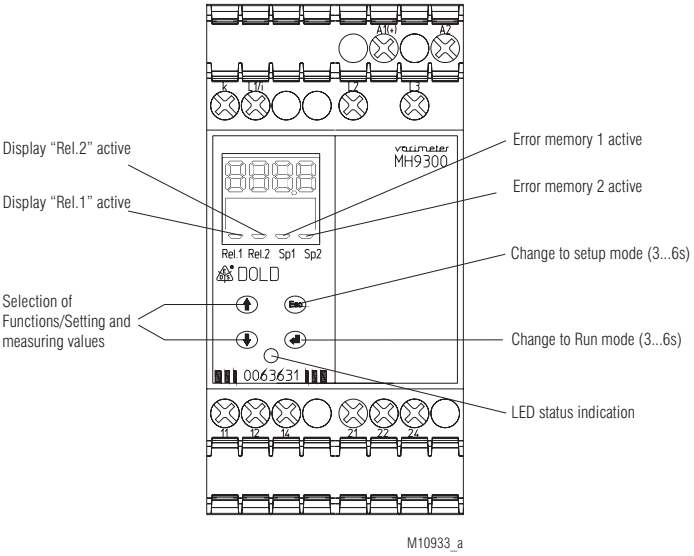

Indicators

The LED indicate the state.

green LED U_N :	on, when auxiliary voltage present
red LED (flashes)	at overload at current path
orange LED:	No measurement, unit in input mode

Cursor LCD Display

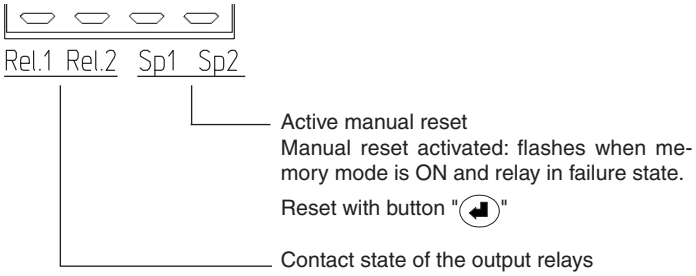

Operating

UP / DOWN

Display (Run) - Mode

After power up the relay is in display (Run) mode.

Scrolls the display to show one of the 10 possible values.

If a values exceeds the setting, the values is indicated flashing on inverted display. In the case of a fault display the display always returns to the fault value after pressing . If voltage is missing on the measuring input some values cannot be calculated and a no value is shown.

Input-Mode

The measurement is interrupted, the relays are in failure state and the indicator LED has orange color

Selection of parameters and setting of thresholds.

ENTER

Display (Run) - Mode:

Manual reset, when manual reset is selected for output relay

Reset works only when fault is removed

Input-Mode:

- Shifts cursor to the right
- Saves the value no-voltage safe
- Pressing for more than 3 sec: Change to display (Run) mode.

Esc

Display (Run) - Mode

- Pressing for more than 3 sec: Change to input mode

Input-Mode:

- Shifts cursor to the left
- Leave setting without saving

LCD-Display



Setting of response values

< Fault, when value drops under set point

> Fault, when value exceeds set point

OFF measurement disabled

If the adjusted threshold of at least one measuring function is exceeded, the corresponding relay output switches after the selected time delay tv and the fault is indicated on the display.

Manual reset can be activated or de-activated and is operated with on the unit.

Adjustable Parameter

Limit values for Rel.1 and Rel.2 Selectable with buttons .		Factory setting
U_{min}:	Response value undervoltage, Lowest phase to phase voltage (Undervoltage relay)	OFF
U_{max}:	Response value overvoltage, Highest phase to phase voltage L1, L2 or L3 (Overvoltage relay)	440 V
Asym:	Response value voltage asymmetry, Percentage of highest to lowest phase to phase voltage (Asymmetry relay)	20 %
I:	Response value current at current path L1 (< under- / > overcurrrent)	> 8.00 A
Cos-φ:	Response value phase displacement between current and voltage (< under- / > overload monitor)	OFF
P:	Response value effective power 3-phase Independent of phase sequence switches at adjusted value also at reverse power (< under- / > overload)	OFF
S:	Response value apparent power 3-phase (< / >)	OFF
Q:	Response value reactive power (< / >)	OFF
f:	Response value frequency (range 1 ... 400 Hz) (< under / > overfrequency)	OFF
Hyst:	Hysteresis 0.2 ... 50 % of response value	4.0 %
t_v:	On delay for relays (0 ... 10 sec)	0 s
Phseq:	Monitoring phase sequence (ON / OFF)	ON
A / R:	Seting open- / closed circuit operation	R
Sp:	Error storage (ON / OFF)	OFF

Response values can be deactivated. (OFF)

Further Setting Parameter

Selectable with buttons .		Factory setting
t_a:	Start up delay, when auxiliary voltage connected (0.2 ... 10 sec) in steps of 0.1 s	0.2 s

Restore Factory Settings

(Restore factory settings)

Before auxiliary voltage connected press button Esc .

During start press and hold.

Indicator output

Monitoring parameters can be set independently.

The MK9300N has 1 relay output.

The MH 9300 has 2 relay outputs.

Each monitoring function can be assigned to Relay 1 and/or to Relay 2.

The switching mode energized or de-energized on trip can be set in input mode.

Operating

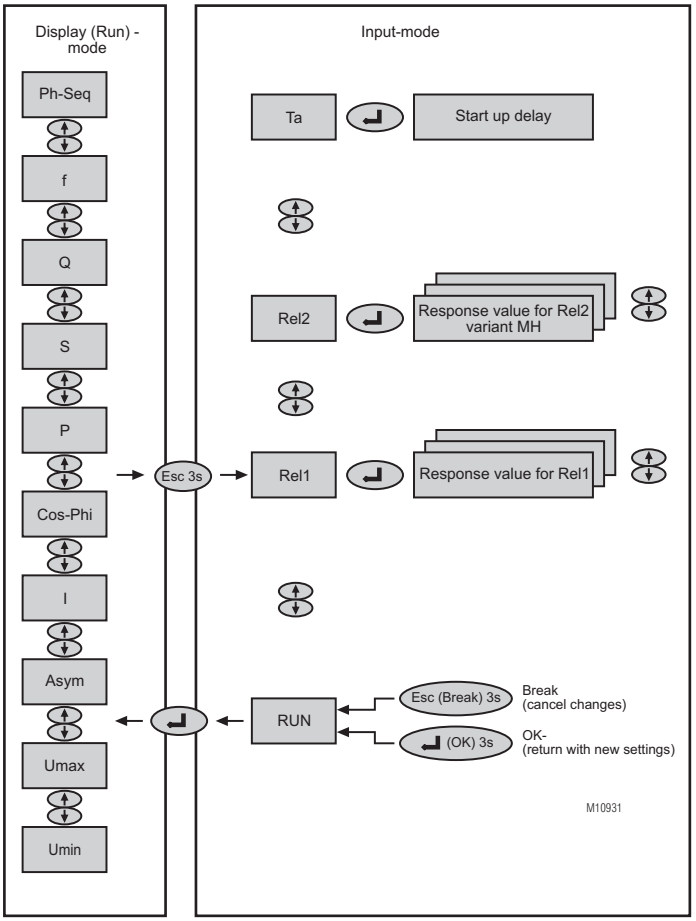

After connecting the auxiliary supply A1/A2 the unit is in display (Run) mode**:**

The display is inverted when a measured value is exceeds the settings.
With button ↵ the fault memory is reset.

The actual measured values can be toggled with the ↑ ↓ buttons.

Pressing button Esc for more than 3 sec the unit changes to input mode.

In input mode the measurement is disabled, the relays are in failure mode and the indicator LED is orange.

With the buttons ↑ ↓ the different setting values can be chosen.

Move cursor position

↵ One character to the right

Esc One character to the left

Back to the Display (Run)-Mode

Press button ↵ 3 s OK New values stored

or

Press button Esc 3 s; Break Values unchanged

RUN on the display confirm with ↵ to change to display (Run) mode.

Display (RUN) Mode	Input-Mode
Display inverted when the actual value is in failure state.	Measurement interrupted, relays are in failure state, indicator LED orange color
↑ ↓ Scroll display between the 10 different measuring values.	↑ ↓ Chose Rel1, Rel2, T_a and RUN As option address for RS485 Bus ↑ ↓ Chose parameter Change and set response values for Rel1 and Rel2.
Reset fault memory: ↵	Esc Shift cursor to the left ↵ Shift cursor to the right
Esc For more the 3 sec, change to input mode	↵ For more than 3 sec, change to display mode

Operating - Display - Menü (RUN) Mode

Cursor-display

R1 R2 relay 1 energized

R1 R2 relay 2 energized

R1 R2 relay 1 and 2 energized

Cursor flashes during time delay tv

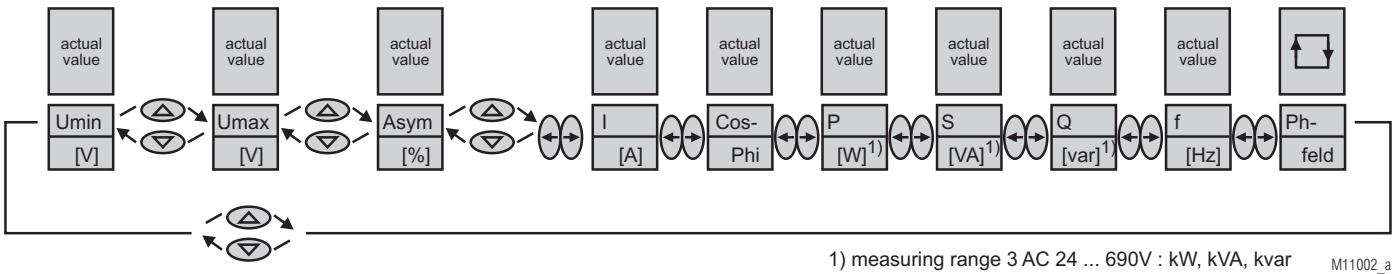

1) measuring range 3 AC 24 ... 690V : kW, kVA, kvar M11002_a

The menu for relay 2 is identically

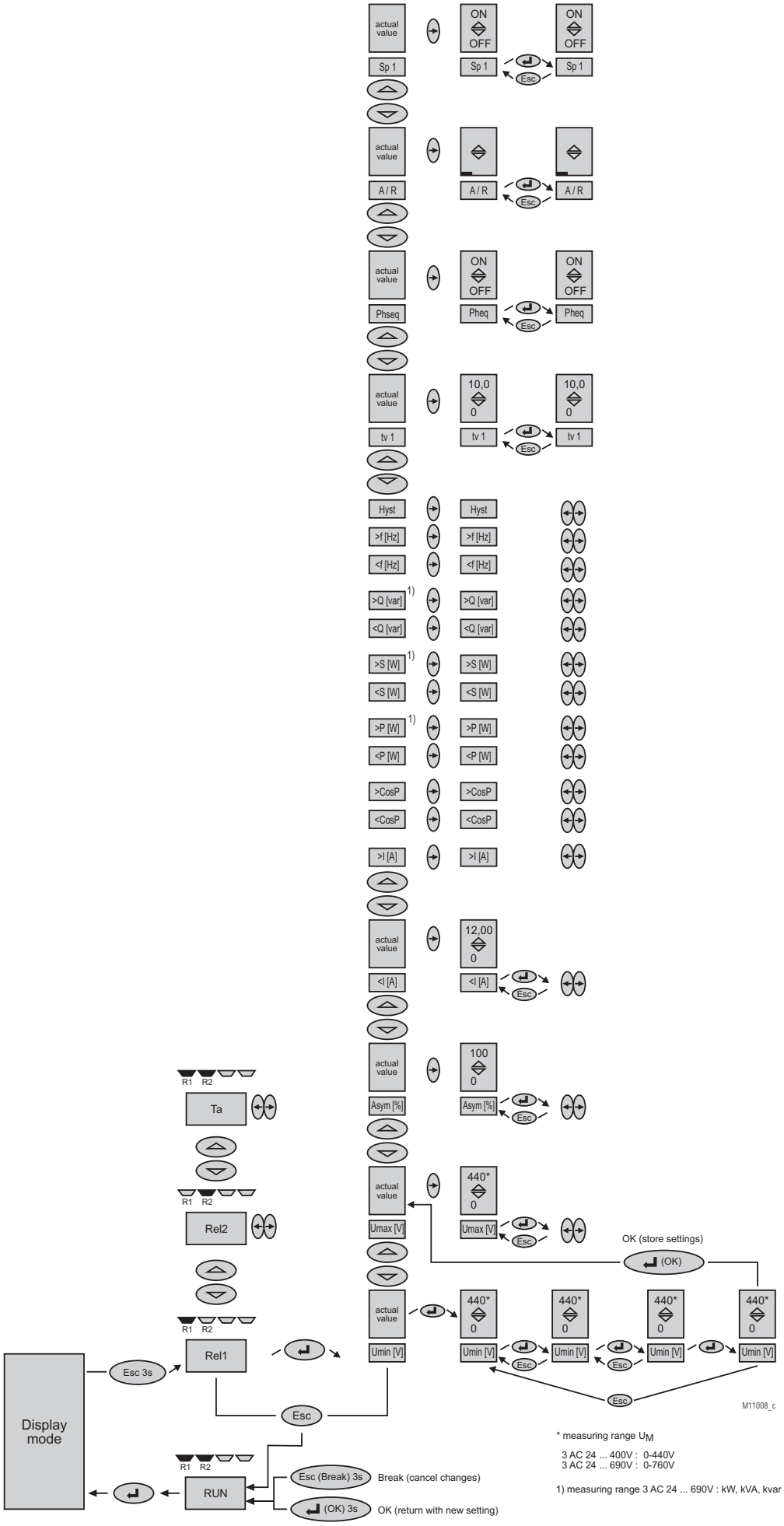

Operating - Setting valid for both relays -

Start up delay t_a: 0 ... 10 s in steps of 0.1 s

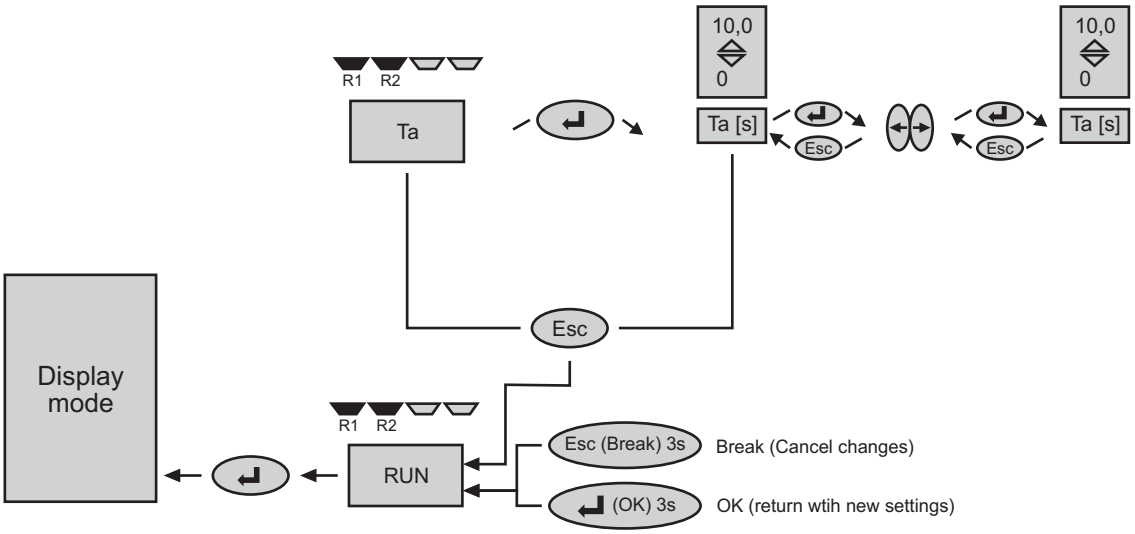

M11004_a

Technical Data

Auxiliary Voltage A1/A2

Nominal auxiliary voltage U_H

MK 9300N:	DC 24 V (0.9 ... 1.1 x U_H)
MH 9300:	AC 110, 230 V, 400 V (0.8 ... 1.1 x U_H) AC/DC 110 ... 400 V (0.8 ... 1.1 x U_H) DC 24 V (0.9 ... 1.1 x U_H)V
Nominal frequency:	50 / 60 Hz
Frequency range:	45 ... 400 Hz
Input current	
at DC 24 V:	50 mA
at AC 230 V:	15 mA

Voltage Measuring Input L1/L2/L3

MK 9300N:	
Nominal voltage:	3 AC 400 V
Measuring range U_M:	3 AC 24 ... 400 V (0,8 ... 1,1 x U_M)
MH 9300:	
Nominal voltage:	3 AC 400 V / 690 V
Measuring range U_M:	3 AC 24 ... 400 V, 24 ... 690 V (0,8 ... 1,1 x U_M)
Nominal frequency:	50 / 60 Hz
Frequency range:	1 ... 400 Hz

Technical Data

Current Measuring Input i / k

Nominal current:	AC 12 A
Measuring range:	AC 100 mA ... 12 A
Max. overload	
continuously:	16 A
short time < 10 s:	max. 25 A If current range is overloaded, the LED flashes fast
Nominal frequency:	50 / 60 Hz
Frequency range:	45 ... 400 Hz

Setting Range (absolute, via button and LCD-display)

Measuring accuracy at nominal frequency (in % of setting value):	± 4 %
Hysteresis (in % of setting value):	0.2 ... 50 % of response value
Reaction time:	< 350 ms (f > 10 Hz)
Adjustable on delay t_v:	0 ... 10 s (in steps of 0.1 s)
Adjustable start up delay t_a:	0.2 ... 10 s (in steps of 0.1 s)

Output Circuit (Rel1: 11/12/14; Rel2: 21/22/24)

Contacts:		
MK 9300N:	1 changeover contact	
MH 9300:	1 changeover contact (Rel1) and 1 changeover contact (Rel2)	
Thermal current I_{th}:	2 x 4 A	
Switching capacity		
to AC 15:		
NO contacts:	3 A / AC 230 V	IEC/EN 60 947-5-1
NC contacts:	1 A / AC 230 V	IEC/EN 60 947-5-1
to DC 13		
NO contacts:	1 A / DC 24 V	IEC/EN 60 947-5-1
NC contacts:	1 A / DC 24 V	IEC/EN 60 947-5-1
Electrical life		
to AC 15 at 3 A, AC 230 V:	2 x 10^5 switch. cycl.	IEC/EN 60 947-5-1
Permissible switching frequency:	1800 / h	
short circuit strength		
Max. fuse rating:	4 A gG / gL	IEC/EN 60 947-5-1
Mechanical life:	30 x 10^6 switching cycles	

Technical Data

General Data

Nominal operating mode:	continuous operation	
Temperature range		
Operation:	- 20... + 60 °C (at range 0 ... - 20 °C limited function of the LCD display)	
Storage:	- 20... + 60 °C	
Altitude:	< 2,000 m	
Clearance and creepage distance rated impulse voltage / pollution degree		
Auxiliay voltage / meas. input:	6 kV / 2	IEC/EN 60 664-1
Auxiliay voltage / contacts:	6 kV / 2	IEC/EN 60 664-1
Measuring input / contacts:	6 kV / 2	IEC/EN 60 664-1
Contacts 11,12,14 / 21,22,24:	4 kV / 2	IEC/EN 60 664-1
Overvoltage category:	III	
EMC		
Electrostatic discharge (ESD):	8 kV (air)	IEC/EN 61 000-4-2
HF-irradiation 80 MHz ... 2.7 GHz	10 V / m	IEC/EN 61 000-4-3
Fast transients:	2 kV	IEC/EN 61 000-4-4
Surge voltages between wires for power supply:	2 kV	IEC/EN 61 000-4-5
between wire and ground:	4 kV	IEC/EN 61 000-4-5
HF-wire guided:	10 V	IEC/EN 61 000-4-6
Interference suppression:	Limit value class A*) *) The device is designed for the usage under industrial conditions (Class A, EN 55011). When connected to a low voltage public system (Class B, EN 55011) radio interference can be generated. To avoid this, appropriate measures have to be taken.	
Degree of protection		
Housing:	IP 40	DIN EN 60 529
Terminals:	IP 20	DIN EN 60 529
Housing:	thermoplastic with VO behaviour according to UL Subject 94	
Vibration resistance:	Amplitude 0.35 mm, frequency 10 ... 55 Hz	IEC/EN 60 068-2-6
Climate resistance:	20 / 060 / 04	EN 60 068-1
Wire connection		DIN 46 228-1/-2/-3/-4
Screw terminal (fixed):	1 x 4 mm² solid or 1 x 2.5 mm² stranded ferruled (isolated) or 2 x 1.5 mm² stranded ferruled (isolated) or 2 x 2.5 mm² solid	
Insulation of wires or sleeve length:	8 mm	
Terminal block with screw terminals		
Max. cross section:	1 x 2.5 mm² solid or 1 x 2.5 mm² stranded ferruled (isolated)	
Insulation of wires or sleeve length:	8 mm	
Terminal block with cage clamp terminals		
Max. cross section:	1 x 4 mm² solid or 1 x 2.5 mm² stranded ferruled (isolated)	
Min. cross section:	0.5 mm²	
Insulation of wires or sleeve length:	12 $^{\pm 0.5}$ mm	
Wire fixing:	Plus-minus terminal screws M3,5 box terminals with wire protection or cage clamp terminals	
Fixing torque:	0.8 Nm	
Mounting:	DIN rail	IEC/EN 60 715
Weight:		
MK 9300N:	approx. 140 g	
MH 9300:	approx. 250 g	

Dimensions

Width x height x depth:	
MK 9300N:	22.5 x 90 x 97 mm
MH 9300:	45 x 90 x 97 mm

DNV GL- Data

Tested according to Class Guideline DNVGL-CG-0339, Edition November 2015

Certificate No: TAA0000155

Location class

Temperature:	B
Humidity:	B
Vibration:	A
EMC:	A
Enclosure:	A

Standard Types

MK 9300N.11/022 3 AC 20 ... 440 V AC 12 A DC 24 V

Article number:	0063630
• Measuring voltage:	3 AC 20 ... 440 V
• Measuring current:	AC 12 A
• Auxiliary voltage U_H:	DC 24 V
• Output:	1 changeover contact
• Width:	22,5 mm

MH 9300.12/022 3 AC 20 ... 440 V AC 12 A AC 230 V

Article number:	0063631
• Measuring voltage:	3 AC 20 ... 440 V
• Measuring current:	AC 12 A
• Auxiliary voltage U_H:	AC 230 V
• Output:	1 changeover contact (Rel1) and 1 changeover contact (Rel2)
• Width:	45 mm

Ordering Example

MK 9300N .11 _ _ /022 3 AC 20 ... 440 V AC 12 A DC 24 V

- Auxiliary voltage U_H
- Measuring current U_M
- Measuring voltage
- Type of terminals
  - without indication: terminal blocks fixed with screw terminals
  - PC (plug in cage clamp): pluggable terminal blocks with cage clamp terminals
  - PS (plug in screw): pluggable terminal blocks with screw terminals
- Contacts
- Type

Options with Pluggable Terminal Blocks



Screw terminal
(PS/plugin screw)

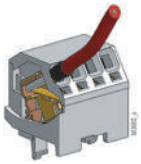

Cage clamp terminal
(PC/plugin cage clamp)

Notes

Removing the terminal blocks with cage clamp terminals

1. The unit has to be disconnected.
2. Insert a screwdriver in the side recess of the front plate.
3. Turn the screwdriver to the right and left.
4. Please note that the terminal blocks have to be mounted on the belonging plug in terminations.

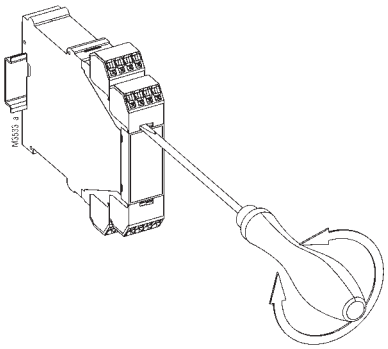

Safety notes

Dangerous voltage.
Electric shock will result in death or serious injury.

Disconnect all power supplies before servicing equipment.

- Faults must only be removed when the relay is disconnected
- The user has to make sure that the device and corresponding components are installed and wired according to the local rules and law (TUEV, VDE, Health and safety).
- Settings must only be changed by trained staff taking into account the safety regulations. Installation work must only be done when power is disconnected.
- Observe proper grounding of all components

Set Up Procedure

The connection has to be made according to the connection examples. To connect the current of L1 the Terminals I and k are available. If the current to be measured exceeds the maximum continuous current of the input and external current transformer has to be used. If current is not measured input k remains unconnected.

Connection Example

