IS5044

Inductive sensor

IS-2002-FRKG/AS

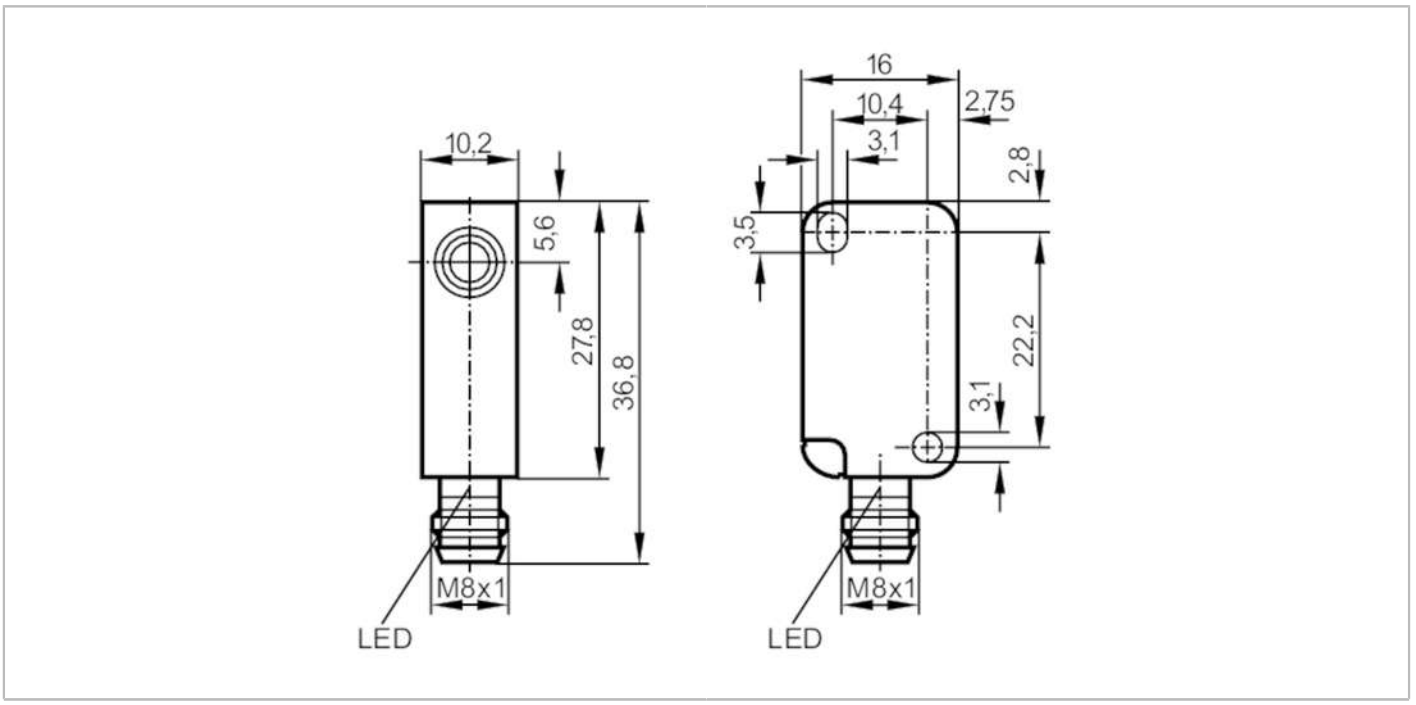

Product characteristics		
Electrical design		PNP/NPN
Output function		normally open / normally closed; (selectable)
Sensing range	[mm]	2
Housing		rectangular
Dimensions	[mm]	28 x 10 x 16
Application		
Special feature		Increased sensing range
Electrical data		
Operating voltage	[V]	5...36 DC
Current consumption	[mA]	< 15
Protection class		III
Reverse polarity protection		yes
Outputs		
Electrical design		PNP/NPN
Output function		normally open / normally closed; (selectable)
Max. voltage drop switching output DC	[V]	4.6
Minimum load current	[mA]	4
Max. leakage current	[mA]	0.8
Permanent current rating of switching output DC	[mA]	200
Switching frequency DC	[Hz]	2000
Short-circuit protection		yes
Overload protection		yes

IS5044

Inductive sensor

IS-2002-FRKG/AS

Detection zone			
Sensing range	[mm]	2	
Real sensing range Sr	[mm]	2 ± 10 %	
Operating distance	[mm]	0...1.62	
Increased sensing range		yes	
Accuracy / deviations			
Correction factor		steel: 1 / stainless steel: 0.7 / brass: 0.4 / aluminium: 0.3 / copper: 0.2	
Hysteresis	[% of Sr]	1...15	
Switch point drift	[% of Sr]	-10...10	
Operating conditions			
Ambient temperature	[°C]	-25...80	
Protection		IP 67	
Tests / approvals			
EMC		EN 61000-4-2 ESD	4 kV CD / 8 kV AD
		EN 61000-4-3 HF radiated	10 V/m
		EN 61000-4-4 Burst	2 kV
		EN 61000-4-6 HF conducted	10 V
		EN 55011	class B
Impact resistance		EN 60068-2-75 Ehc	
Vibration resistance		EN 60068-2-6 Fc	
Shock resistance		EN 60068-2-27 Ea	
Continuous shock resistance		EN 60068-2-29 Eb	
Fast temperature change		EN 60068-2-14 Na	
Salt spray test		EN 60068-2-52 Kb	
MTTF	[years]	2571	
UL approval		Ta	-25...80 °C
		Enclosure type	Type 1
		power supply	Limited Voltage/Current
		File number UL	E174191
Mechanical data			
Weight	[g]	11.4	
Housing		rectangular	
Mounting		flush mountable	
Dimensions	[mm]	28 x 10 x 16	
Materials		PBT	
Tightening torque	[Nm]	< 0.5; (with washer)	
Displays / operating elements			
Display		switching status	4 x 90° LED, yellow
Remarks			
Pack quantity		1 pcs.	

IS5044

Inductive sensor

IS-2002-FRKG/AS

Electrical connection - plug

Connector: 1 x M8; coding: A



