escap 16G88

Precious metal commutation system - 9 segments

D.C. Motor 4.5 Watt

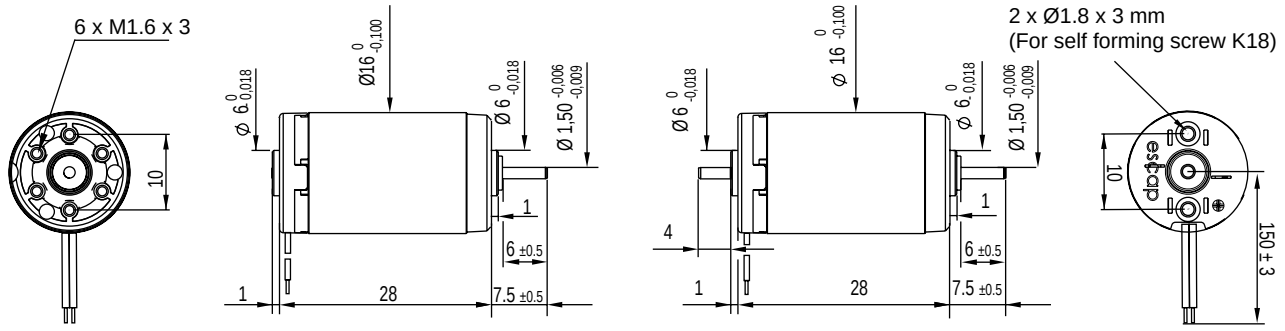

scale: 1:1
dimensions in mm
mass: 24 g

16G88 •••• • 1

16G88 •••• • 2

Winding types	••••	-220P	-220E	-213E	-211E	-210E	-208E
Measured values							
1 Measuring voltage	V	3	6	9	12	15	24
2 No-load speed	rpm	11000	11700	8200	9700	9100	11300
3 Stall torque	mNm (oz-in)	19.4 (2.7)	18.3 (2.6)	12.3 (1.74)	11.2 (1.59)	11.6 (1.64)	12.4 (1.76)
4 Average no-load current	mA	45	24	14	10	9	6
5 Typical starting voltage	V	0.02	0.03	0.06	0.07	0.1	0.2
Max. recommended values							
6 Max. continuous current	A	2.3	1.15	0.53	0.41	0.33	0.23
7 Max. continuous torque	mNm (oz-in)	5.8 (0.82)	5.5 (0.78)	5.3 (0.75)	4.7 (0.67)	5 (0.71)	4.5 (0.64)
8 Max. angular acceleration	10^3 rad/s^2	155	146	142	125	131	122
Intrinsic parameters							
9 Back-EMF constant	V/1000 rpm	0.27	0.51	1.08	1.23	1.62	2.1
10 Torque constant	mNm/A (oz-in/A)	2.58 (0.365)	4.87 (0.69)	10.3 (1.46)	11.7 (1.66)	15.5 (2.19)	20.1 (2.84)
11 Terminal resistance	ohm	0.4	1.6	7.56	12.5	20.1	39
12 Motor regulation R/k^2	10^3/Nms	60	67	71	91	84	97
13 Rotor inductance	mH	0.01	0.045	0.14	0.26	0.35	0.72
14 Rotor inertia	kgm^2 . 10^{-7}	1.5	1.5	1.5	1.5	1.5	1.5
15 Mechanical time constant	ms	9	10	11	14	13	15

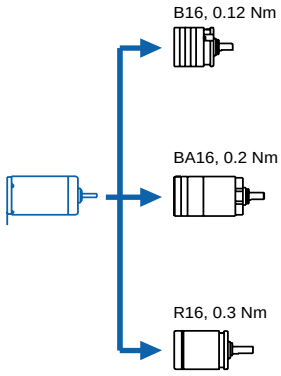

- Thermal resistance:
  rotor-body 8°C/W
  body-ambient 35°C/W
- Thermal time constant - rotor / stator:
  6 s / 500 s
- Max. rated coil temperature: 100°C (210°F)
- Recom. ambient temperature range:
  -30°C to +65°C (-22°F to +150°F)
- Viscous damping constant:
  0.05 x 10^{-6} Nms
- Max. axial static force for press-fit: 100 N
- End play: ≤ 150 µm
  Radial play: ≤ 30 µm
  Shaft runout: ≤ 10 µm
- Max. side load at 5 mm from mounting face:
  - sleeve bearings 1.5 N
  - ball bearings 3 N
- Motor fitted with sleeve bearings
  (ball bearings optional)

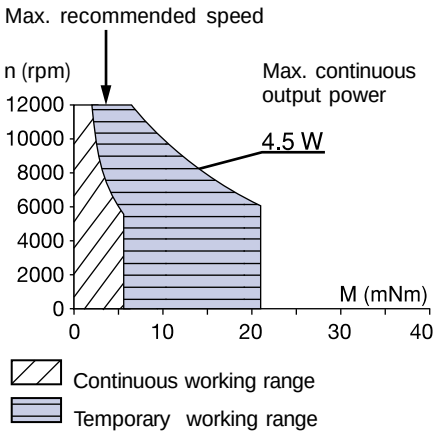

© Portescap

Specifications subject to change without prior notice