Bourdon tube pressure gauges, liquid filled,
Type 213.53.0XX
Item no.: 8406065

Description	
Design according	EN 837-1
Accuracy class	class 1.6
Scale range	0...6 bar
Constructional design	
Process connection	G 1/4 B
Connector location	lower mount
Pressure element	Copper alloy
Movement	Copper alloy
Case	Crimp ring case (version 53)
Nominal size	050 mm
Case filling fluid	glycerine
Pointer	plastic, black
Window	plastic, clear
Dial	plastic, white, with stop-pin
Operating conditions	
Pressure limitation	Steady: 3/4 x full scale value Fluctuating: 2/3 x full scale value Short time: Full scale value
Permissible ambient temperature	-20 ... +60 °C
Permissible medium temperature	+60°C maximum
Temperature effect when the temperature deviates from the reference temperature (+20°C)	Max. +-0.4 %/10 K of the span
Ingress protection	IP 65

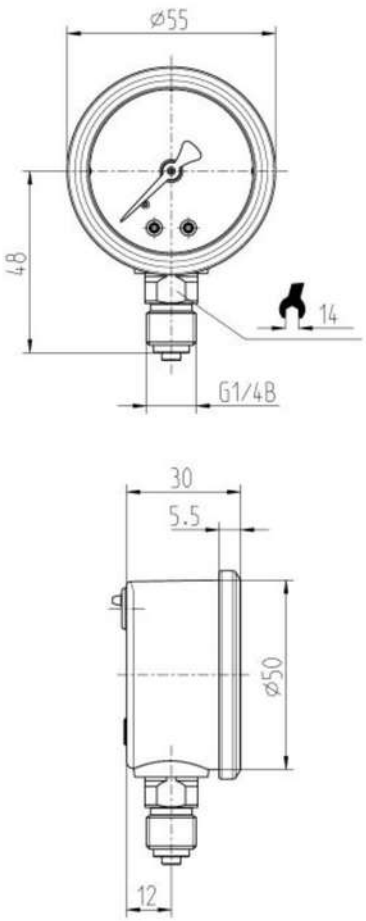

WIKA Instruments – 38 Avenue du Gros Chêne – 95220 HERBLAY
Phone0 820 95 10 10
info_fr@wika.com • http://www.wika.fr