

Version of 05/16/2022

JK 0030A1

Powered Loop Transmitter





Universal power supply



Hot-swappable plug in and out



Sensor power supply

Presentation

JK 0030A1 is a powered loop isolator specially designed to isolate 0...4... 20mA.

JK 0030A1 is guaranteed for 5 years

Transmitter	Input Current	Output Current	HART Transparency
	Number of inputs	Number of outputs	
	1	1	
JK 0030A1	✓	✓	
JK 0030A1-H	✓	✓	✓

Factory settings

Input	Output
4-20mA	4-20mA

Other settings on demand

Inputs - Outputs

Possible settings for JK0030A1 :

Input 0-20mA / Output 0-20mA

Input 4-20mA / Output 0-20mA

Input 4-20mA / Output 4-20mA

Input gauges

Current (continuous)	0-20mA ; 4-20mA
Sensor supply	2 or 3 wires sensor 24V - 29mA max

Output gauges

Output Current	0-20mA ; 4-20mA

Characteristics

Input characteristics	
Input maximum current	200mA
Current input impedance	4,75Ω
Output characteristics	
Permissible impedance on the current output	<800Ω
Isolation	
Supply / Input-Output	4200Vrms, 50Hz, 1mn
Input / Output	1500Vrms, 50Hz, 1mn
Auxiliary source	
Voltage supply	22-240Vdc or 90-230Vac 50/60Hz
General characteristics	
Precision class	0,1
Response time	<100µs
Thermal drift	<50ppm
Residual ripple on current output	<150µA
Maximum of consumption	<5.5VA
Operating temperature	-10°C … +60°C
Storage temperature	-25°C … +80°C
Protection factor	IP20 Black self-extinguishing polyamide housing V0

Options listing

Option	Device code
Tropicalization in a 22,5mm case	JK 0030A1-T
Auxiliary source 20-60Vac	JK 0039A1
Lightning shock resistance LCIE Report 60031114-529387	JK 0030A1-F

Dimensions and wiring

Dimensions

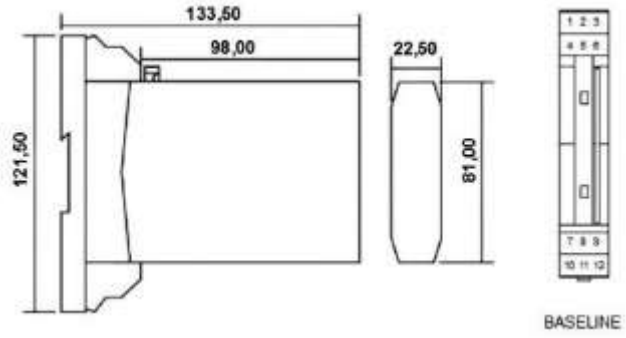

Dimensions: width: 22,5 mm - Height: 81 mm - Depth: 98 mm

BASELINE boards are to be ordered separately
22,5 mm Case : Reference BL01ALV
For multi-transmitter boards, please consult us.

Wiring

JK 0030A1

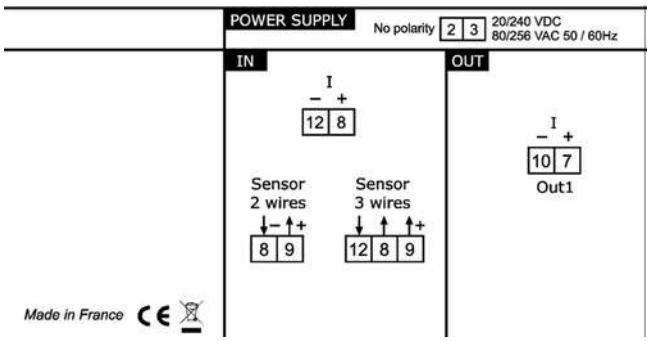

JK 0030A1-H

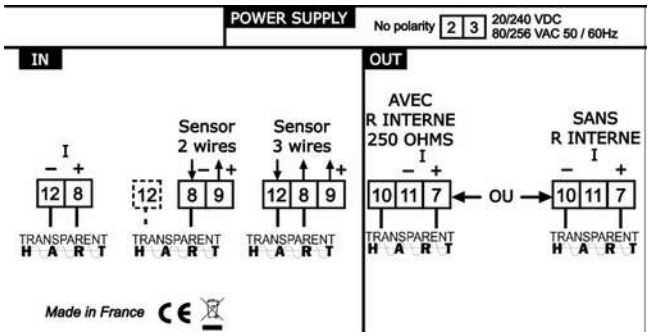

Output setting procedure

- Connect a current generator to the input terminals.
- Connect a current multimeter to the terminals of the output.
- Use the generator to inject the signal corresponding to the low value of the input signal.
- Use the "OFFSET" potentiometer to adjust the low scale of the output.
- Use the generator to inject the signal corresponding to the high value of the input signal.
- Use the "SCALE" potentiometer to adjust the top of the scale of the output

Repeat successively these 2 operations as many times as necessary until the correct low and high scale values are obtained.