ABC

1/4" x 1 1/4" Fast-acting ceramic tube fuses

RoHS

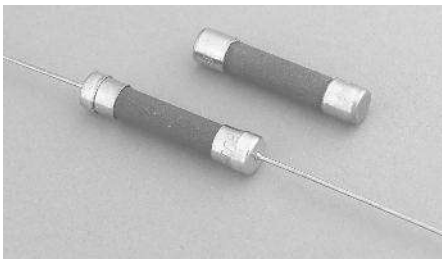

ELECTRICAL CHARACTERISTICS	
% of Amp Rating	**Opening Time**
100%	4 Hours Minimum
135%	60 Minutes maximum
200%	120 Seconds Maximum

Product features

- Fast-acting, ceramic tube
- Optional axial leads available
- 1/4" x 1 1/4" (6.4 x 31.7mm) physical size
- Ceramic tube, nickel-plated brass endcap construction
- UL Listed product meets standard 248-14

Agency information

- UL Listed Guide JDYX & File E19180
- UL Recognition Guide JDYX2 & File E19180
- CSA Certification: Class No: 1422-01 & 1422-30, File 53787

Ordering

- Specify packaging, product and option code

Specifications

Part Number	Voltage Ratings		Vac Interrupting Ratings* (amps)		Vdc Interrupting Ratings (amps)		Typical DC Cold Resistance (Ω)**	Typical Pre-Arc I²t AC†	Typical Voltage Drop (V)‡	Agency Approvals		
	Vac	Vdc	250V	125V	125V	75V				UL	UR	CSA
ABC-¼-R	250	125	35	10,000	10,000	–	2.950	0.0020	0.35	X		X
ABC-½-R	250	125	35	10,000	10,000	–	0.587	0.0390	0.41	X		X
ABC-¾-R	250	125	35	10,000	10,000	–	0.300	0.1450	0.32	X		X
ABC-1-R	250	125	35	10,000	10,000	–	0.1950	0.4310	0.3	X		X
ABC-1-½-R	250	125	100	10,000	10,000	–	0.131	1.1630	0.28	X		X
ABC-2-R	250	125	100	10,000	10,000	–	0.0890	2.1670	0.31	X		X
ABC-2-½-R	250	125	100	10,000	10,000	–	0.061	4.4670	0.23	X		X
ABC-3-R	250	125	100	10,000	10,000	–	0.047	6.55	0.14	X		X
ABC-4-R	250	125	200	10,000	10,000	–	0.031	22.28	0.17	X		X
ABC-5-R	250	125	200	10,000	10,000	–	0.026	32.83	0.22	X		X
ABC-6-R	250	125	200	10,000	10,000	–	0.021	58	0.19	X		X
ABC-7-R	250	125	200	10,000	10,000	–	0.016	109.33	0.17	X		X
ABC-8-R	250	125	200	10,000	10,000	–	0.014	116.5	0.19	X		X
ABC-10-R	250	125	200	10,000	10,000	–	0.011	208.8	0.15	X		X
ABC-12-R	250	125	750	10,000	10,000	–	0.0068	133.3	0.1	X		X
ABC-15-R	250	125	750	10,000	10,000	–	0.00553	200.2	0.1	X		X
ABC-18-R	250	–	400	1000	–	–	0.00465	400	0.1		X	X
ABC-20-R	250	125	400	1000	10,000	–	0.00366	550.8	0.1		X	X
ABC-25-R	250	125	200	1000	400	1000	0.0028	839.3	0.09		X	X‡‡
ABC-30-R	250	125	200	1000	400	1000	0.002225	1429	0.09		X	X‡‡

* Interrupting ratings measured at 70% - 80% power factor on AC. The interrupting ratings for 18A and 20A were measured at 85% - 95% power factor on AC. The interrupting ratings for 25A and 30A were measured at 89% power factor on AC.
** Typical DC cold resistance measured at <10% of rated current.
† Typical melting I2t measured at listed interrupting rating and rated voltage.
‡ Typical voltage drop measured at 25°C±3°C ambient temperature at rated current.
‡‡ CSA approvals for 25A and 30A are at 125Vac - IR 1000A and 125Vdc - IR 400A (IR 1000A at 75Vdc)

Dimensions - mm

Drawing Not to Scale

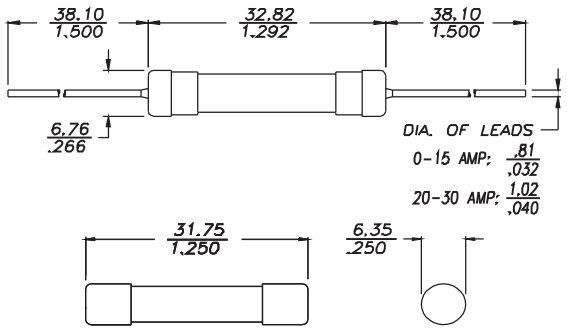

Time-Current Curves

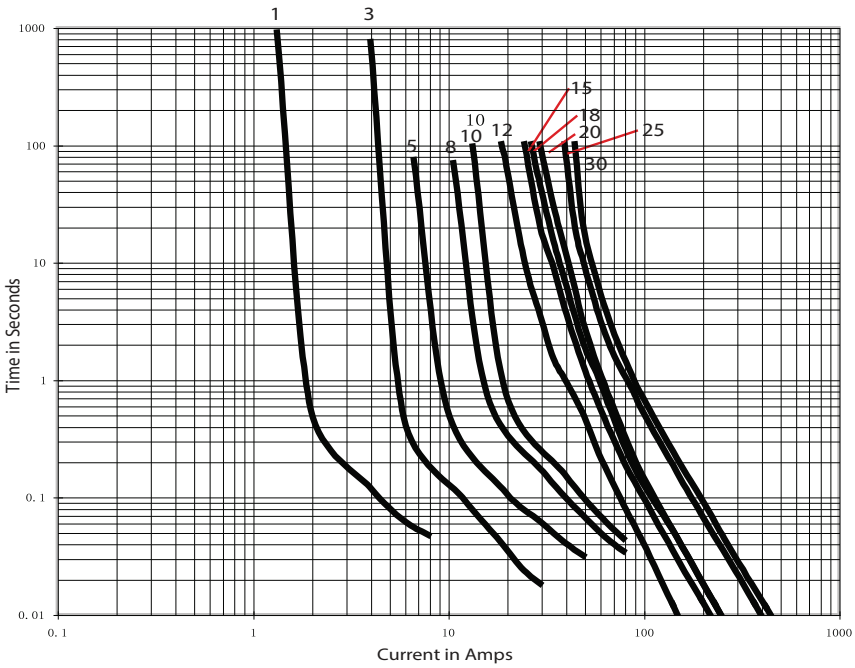

PACKAGING CODE	
Packaging Code	**Description**
BK	100 pieces of fuses packed into a cardboard carton
BK1	1000 pieces of fuses packed into a cardboard carton
BK8	8000 pieces of fuses packed into a cardboard carton

OPTION CODE	
Option Code	**Description**
V	Axial leads - copper tinned wire with nickel plated brass overcaps

Life Support Policy: Eaton does not authorize the use of any of its products for use in life support devices or systems without the express written approval of an officer of the Company. Life support systems are devices which support or sustain life, and whose failure to perform, when properly used in accordance with instructions for use provided in the labeling, can be reasonably expected to result in significant injury to the user.

Eaton reserves the right, without notice, to change design or construction of any products and to discontinue or limit distribution of any products. Eaton also reserves the right to change or update, without notice, any technical information contained in this bulletin.

Eaton
Electronics Division
1000 Eaton Boulevard
Cleveland, OH 44122
United States
www.eaton.com/electronics

© 2017 Eaton
All Rights Reserved
Printed in USA
Publication No. 2000 BU-SB13635
May 2017

Eaton is a registered trademark.

All other trademarks are property of their respective owners.

Powering Business Worldwide