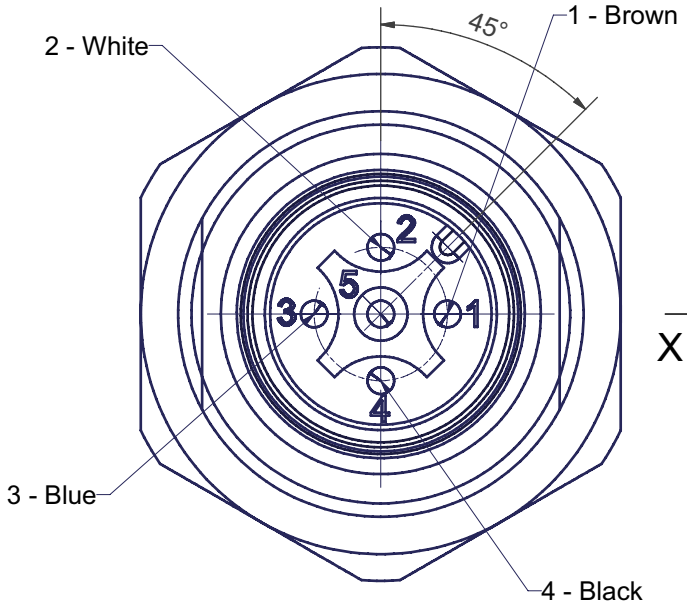

X

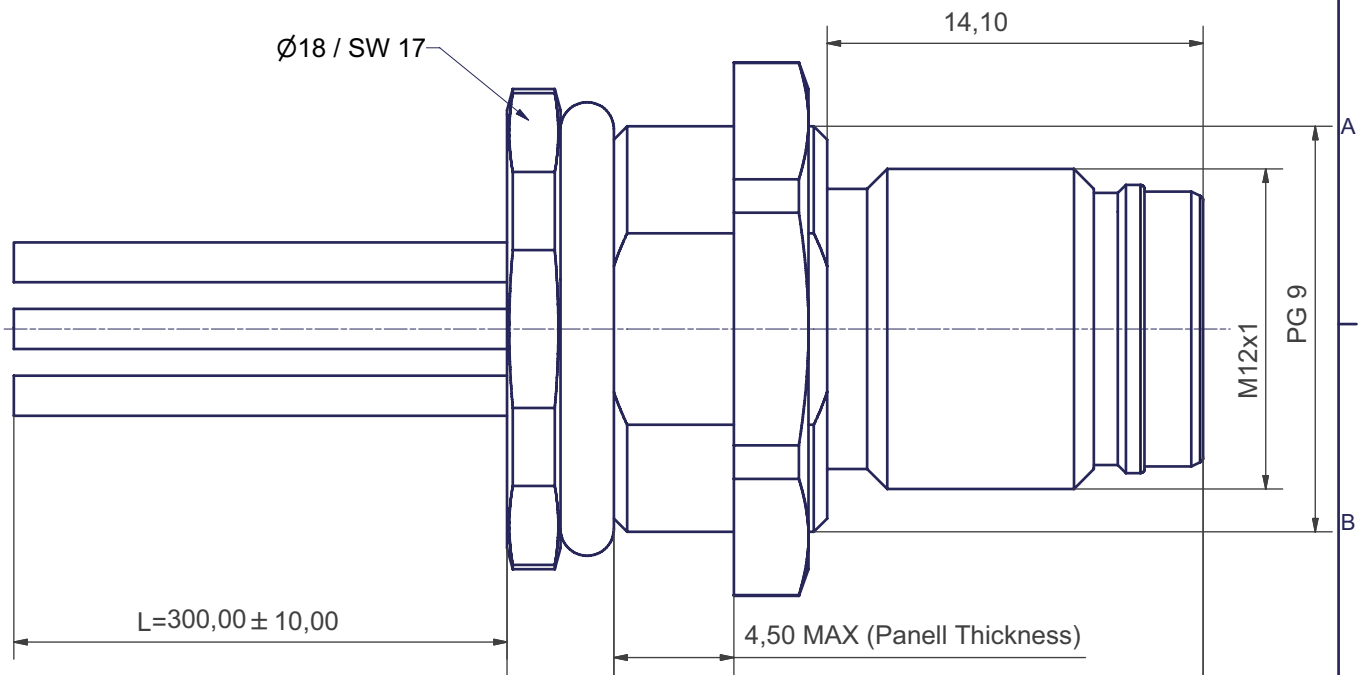

X

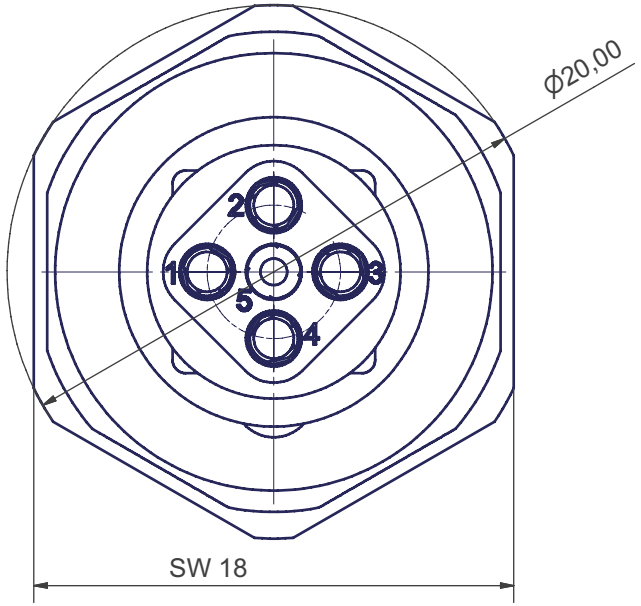

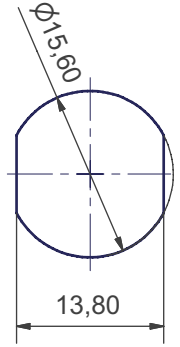

Typical Knockout

Pos.	QTY	PART NUMBER	DESCRIPTION	MATERIAL / COLOR / SURFACE
1	1	K912 006GM 08000	REC SHELL MALE; FRONT; PG9	CuZn39Pb3 - Cu/Ni3b+2ym Bright Nickel
2	1	2942 040A0 00001	INSERT MALE 4P	PA 6.6 GF25
3	4	K970 00010 01000	MALE CONTACT -STAMPED	0,14-0,5mm²
4	4	LIY0.34	PVC; Auto Color Code	BROWN, WHITE, BLUE, BLACK
5	1	0900 0090 00001	Hex Nut PG9	CuZn39Pb3 - Cu/Ni3b+2ym Bright Nickel
6	1	11x2	O-Ring	NBR 70, BLACK
7	1	-	Potting Material / UL listed	-

For missing dimensions refer to IEC 61076-2-101
IEC Style: -
Color Code of Leads as per EN 50 044

(1 : 1)

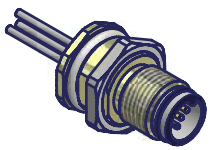

This drawing and its contents are the proprietary and confidential property of Woodhead Industries Inc. and/or its subsidiaries and may not be used or disclosed to others without the express prior written consent of Woodhead Industries Inc. and/or its subsidiaries.

PROJECTION 1 : GER

UNLESS OTHERWISE SPECIFIED
x = ± 1
X.X = ± 0,1
X.XX = ± 0,05
Winkel = 1°

Scale 5:1 / 1:1 | Dimensions mm
Material -
Finish -

Rev.	Change	Date	Name
02	UPDATE	28.09.05	FP
01	INITIAL RELEASE	21.08.05	FP

	Date	Name
PROC	21.08.2005	FP
CHK		
Norm.		

Woodhead Connectivity GmbH
Gewerbestraße 60
75015 Bretten-Gölshausen
Tel.: 07252/9496-0
Fax: 07252/9496-199

RECEPTACLE MALE M12-4P
Ultra Lock, BACK, PG9

WR4J46E03C3003

Sheet 1
A3

Filename WR4J46E03C3003.idw