Wachendorff Automation GmbH & Co. KG
Industriestraße 7 • D-65366 Geisenheim
Phone: +49 (0) 67 22 / 99 65 -25 • Fax: +49 (0) 67 22 / 99 65 -70
eMail: wdg@wachendorff.de • www.wachendorff.de

Spring lever for length determination



- For encoder WDG 58 B
- Variable installation from below, from above, horizontal, vertical
- Adjustable prestressing force: 20, 25 and 30 N
- Variable running direction on production line
- Can be combined with all measuring wheels of 500 mm circumference
  www.wachendorff.de/springlever

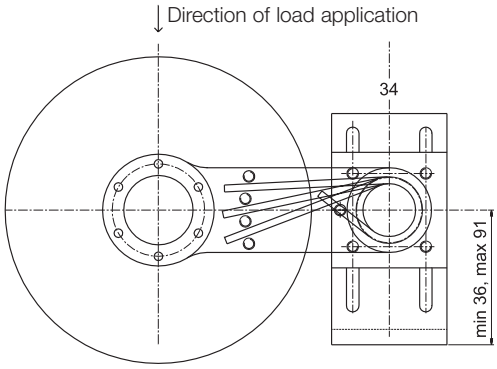

Spring lever, cross section

Spring travel at tension:
20N = 50° ≈ 91 mm
25N = 45° ≈ 84 mm
30N = 40° ≈ 77 mm

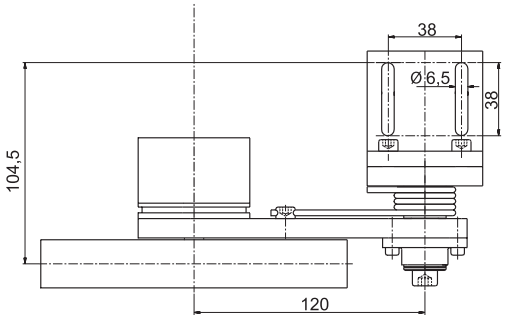

Ordering information

Description	Order-No.
Load direction anti-clockwise (see fig.) Load direction clockwise	WDGMA 10000 WDGMA 10002

Measuring wheels

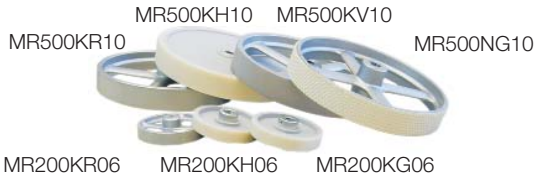

Temperature area:
MR500KH10: -40...+180 °C
MR500KV10: -26...+80 °C
MR500NG10: -30...+90 °C short-time to +120 °C)

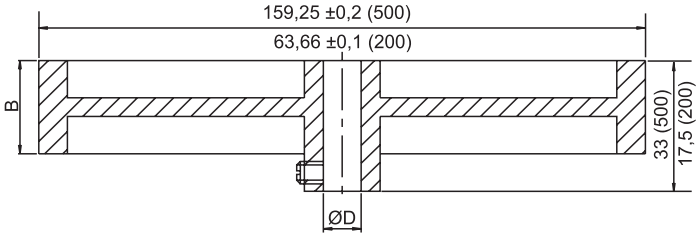

Fields of application	Circum-ference	Surface finish	Hardness Shore A	Wheel body material	Standard bore-hole D	Width B	Weight approx.	Order-No.
Rubber, soft plastics, certain textiles, rough wood	500 mm	Metal, knurled		Aluminium	10 mm	25 mm	350 g	MR500KR10
Wood with even, surface, plastics, wire, greased metals, paper, pasteboard, textile	500 mm	Synthetic (Hytrel, even)	85....90	Plastic	10 mm	25 mm	260 g	MR500KH10
Paper, pasteboard, cable, ungreased metals, raw wood, plastics, wire	500 mm	Synthetic (Vulkollan,even)	90....95	Aluminium	10 mm	25 mm	320 g	MR500KV10
Carpets, coarse textiles	500 mm	Rubber, fluted		Aluminium	10 mm	25 mm	320 g	MR500NG10
Paper, pasteboard, cable, ungreased metal, raw, wood, plastics, textiles, floor coverings	500 mm	Synthetic (Hytrel, chequered)	85....90	Plastic	10 mm	25 mm	260 g	MR500KG10
Rubber, soft plastics, certain textiles, rough wood	200 mm	Metal, knurled		Aluminium	6 mm	12 mm	40 g	MR200KR06
Wood with even, surface, plastics, wire, greased metals	200 mm	Synthetic (Hytrel, even)	85....90	Plastic	6 mm 10 mm	12 mm	35 g	MR200KH06 MR200KH10
Carpets, coarse textiles	200 mm	Rubber, fluted		Aluminium	6 mm 10 mm	12 mm	37 g	MR200NG06 MR200NG10
Paper, pasteboard, cable, ungreased metal, raw wood, plastics, textiles, floor coverings, leather	200 mm	Synthetic (Hytrel, chequered)	85....90	Plastic	6 mm 10 mm	12 mm	35 g	MR200KG06 MR200KG10