# REF. 1325

## CHROMED WASHING MACHINE BRASS VALVE BSP STANDARD TYPE

Chromed washing machine brass , standard angle type.
NBR gaskets.
Progressive opening/closing.



| | |
|---|---|
| **Size :** | DN1/2"-3/4" |
| **Connection :** | Male BSP |
| **Min Temperature :** | +0°C |
| **Max Temperature :** | +90°C |
| **Max Pressure :** | 10 Bars |
| **Specifications :** | For washing machine<br>NBR gaskets<br>Chromed ABS handwheel |
| **Materials :** | Chromed brass |



Information provided as an indication and subject to possible modification

# CHROMED WASHING MACHINE BRASS VALVE BSP STANDARD TYPE

***SPECIFICATIONS :***

- For washing machine

***USE :***

- For cold and hot water
- Min Temperature Ts : 0°C
- Max Temperature Ts : + 90°C
- Max Pressure Ps : 10 bars

***RANGE :***



- Chromed washing machine valve standard type **Ref. 1325** DN 1/2"-3/4“



Information provided as an indication and subject to possible modification

# CHROMED WASHING MACHINE BRASS VALVE BSP STANDARD TYPE

***MATERIALS :***

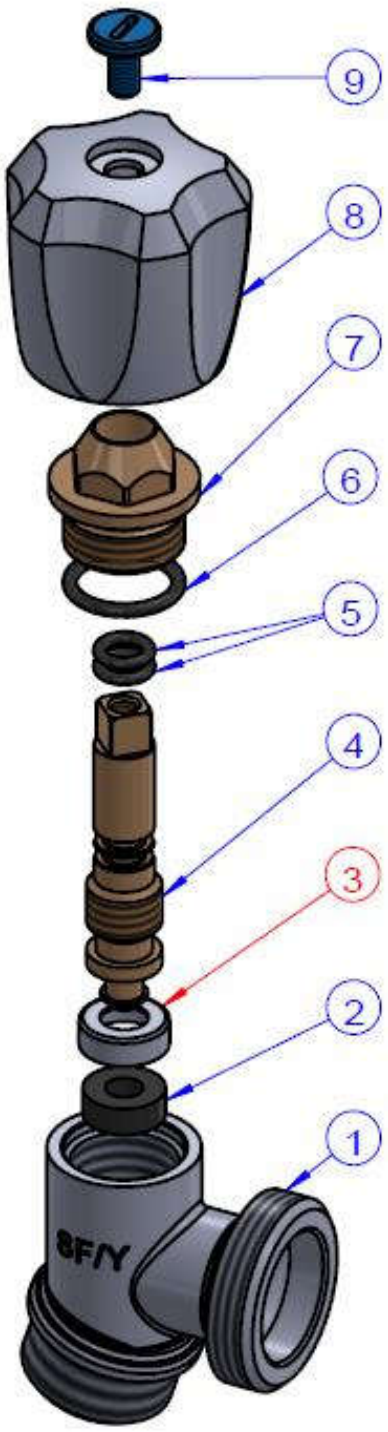


| Item | Designation | Materials |
|---|---|---|
| 1 | Body | Chromed brass |
| 2 | Gasket | NBR |
| 3 | Ring | Steel |
| 4 | Stem | Brass |
| 5 | O ring | NBR |
| 6 | O ring | NBR |
| 7 | Bonnet | Brass |
| 8 | Handwheel | ABS chromed |
| 9 | Screw | PP |



Information provided as an indication and subject to possible modification

# CHROMED WASHING MACHINE BRASS VALVE BSP STANDARD TYPE

***SIZE ( in mm ) :***

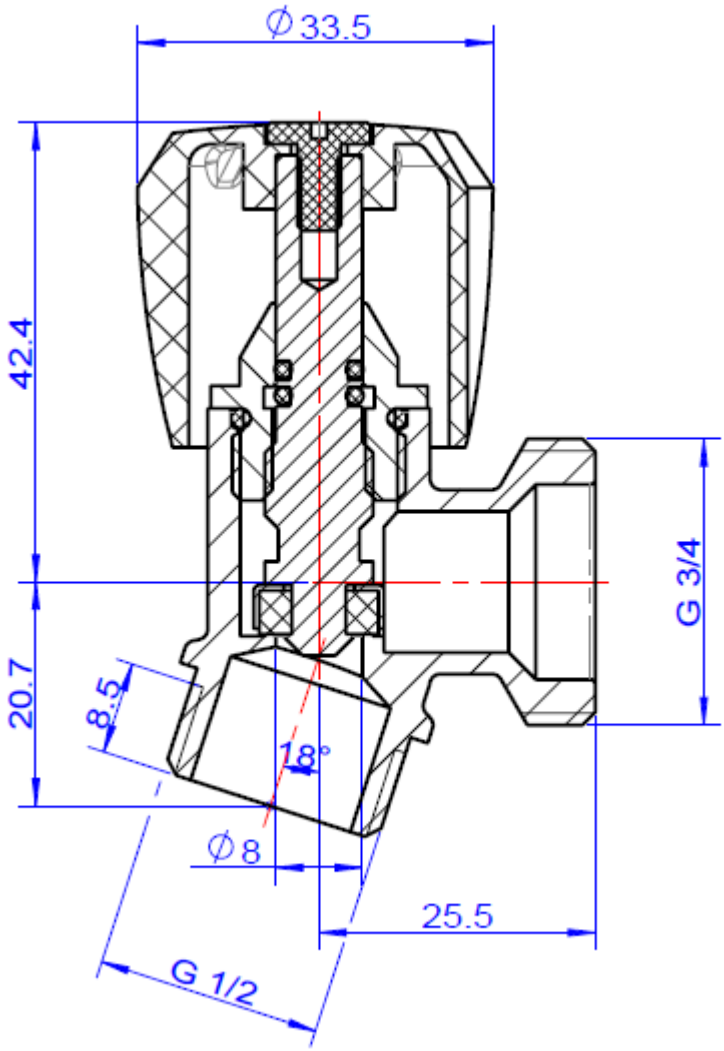


| Ref. | DN | Weight (Kg) |
|---|---|---|
| **1325004** | **1/2-3/4"** | **0.11** |

***STANDARDS :***

- Manufacturer certified ISO 9001 : 2015
- **DIRECTIVE 2014/68/EU** : Products excluded from directive ( Article 1, § 2b )

**ADVICE :** Our opinion and our advice are not guaranteed and SFERACO shall not be liable for the consequences of damages.
The customer must check the right choice of the products with the real service conditions.