LUMEL

MODULE WITH 8 LOGIC INPUTS

SM5



USER'S MANUAL

CE

CONTENTS

1. APPLICATION 5

2. MODULE SET 5

3. BASIC REQUIREMENTS AND OPERATIONAL SAFETY 6

4. INSTALLATION 8

4.1. Module fixing 8

4.2. Electrical connections 8

5. SERVICE 11

5.1 Description of the MODBUS protocol implementation 11

5.2 Description of the MODBUS protocol functions 12

5.3. Map of module registers 15

5.4. Set of module registers 16

6. TECHNICAL DATA 20

7. BEFORE A DAMAGE WILL BE DECLARED 21

8. ORDERING CODES 22

1. APPLICATION

The SM5 module has 8 logic inputs and RS-485 and RS-232 interfaces with MODBUS RTU and ASCII transmission protocols.

It is destined to readout logic states of logic inputs and enables their access in industrial systems. Ports in RS-485 and RS-232 are galvanically isolated from input signals and the supply. The module programming is possible by means of the RS-485 or the RS-232 port. Configurable baud rate: 2400, 4800, 9600, 19200, 34800, 57600, 115200 bit/s. The SM5 module set includes a connecting cable to connect with the PC computer (RS-232).

2. MODULE SET

The set consists of:

- SM5 module ..... 1 pc.
- plug with BU1005 screw terminals ..... 2 pcs
- plug with BU0204 screw terminals ..... 2 pcs
- RS-232 socket hole plug ..... 1 pc

When unpacking the module, please check whether the type and version code on the data plate correspond to the order.

3. BASIC REQUIREMENTS, SAFETY INFORMATION

Symbols located in this service manual mean:

WARNING!



Warning of potential, hazardous situations. Especially important, one must acquaint with this before connecting the module. The non-observance of notices marked by these symbols can occasion severe injuries of the personnel and the damage of the module.

CAUTION!



Designates a general useful note. If you observe it, handling of the module is made easier. One must take note of this, when the module is working inconsistently to the expectations. **Possible consequences if disregarded !**

In the security scope the module the requirements of the EEC. Low-Voltage Directive (EN 61010 -1 issued by CENELEC).

Remarks concerning the operator safety:



1. General

- The SM5 module is destined to be installed in measuring systems, on a 35 mm mounting rail
- Non-authorized removal of the required housing, inappropriate use, incorrect installation or operation creates the risk of injury to personnel or damage to equipment. For more detailed information please study the user's manual.
- All operations concerning transport, installation, and commissioning as well as maintenance must be carried out by qualified, skilled personnel and national regulations for the prevention of accidents must be observed.
- According to this basic safety information, qualified, skilled personnel are persons who are familiar with the installation, assembly, commissioning, and operation of the product and who have qualifications necessary for their occupation.

2. Transport, storage

Please observe the notes on transport, storage and appropriate handling.

Observe the climatic conditions given in technical data.

3. Installation

- The module must be installed according to the regulation and instructions given in this user's manual.
- Ensure proper handling and avoid mechanical stress.
- Do not bend any components and do not change any insulation distances.

- Do not touch any electronic components and contacts.
- Modules may contain electrostatically sensitive components, which can easily be damaged by inappropriate handling.
- Do not damage or destroy any electrical components since this might endanger your health!

4. Electrical connection

- Before switching the module on, one must check the correctness of connection to the network.
- In case of the protection terminal connection with a separate lead, one must remember to connect it before the connection of the module to the mains.
- When working on live modules, the applicable national regulations for the prevention of accidents must be observed.
- The electrical installation must be carried out according to the appropriate regulations (cable cross-sections, fuses, PE connection). Additional information can be obtained from the user's manual.
- The documentation contains information about installation in compliance with EMC (shielding, grounding, filters and cables). These notes must be observed for all CE-marked products.
- The manufacturer of the measuring system or installed devices is responsible for the compliance with the required limit values demanded by the EMC legislation.

5. Operation

- Measuring systems including SM5 modules must be equipped with protection devices according to the corresponding standard and regulations for prevention of accidents.
- After the instrument has been disconnected from the supply voltage, live components and power connections must not be touched immediately because capacitors can be charged.
- The housing must be closed during operation.
- The RS-232 socket serves only to connect the device (Fig. 2) working with the MODBUS protocol. When the module is not used, place the hole plug in the RS-232 socket of the module.

6. Maintenance and servicing

Please observe the manufacturer's documentation.

Read all product-specific safety and application notes in this user's manual.

- Before taking the module out, one must turn the supply off.
- The removal of the module housing during the guarantee period may cause its cancellation.

4. INSTALLATION

4.1 Module fixing

The SM5 module is fixed on a 35 mm rail in accordance with EN 60715. The module housing is made of a self-extinguishing plastic. Overall dimensions of the housing: 45 x 120 x 98 mm.

Overall dimensions and the fixing way are presented on the fig. 1.

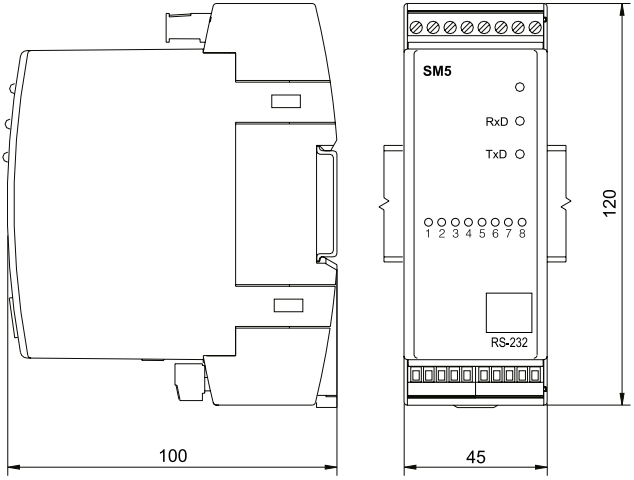

Fig.1. Overall dimensions and way of the module fixing

4.2. Electrical connections

Following external wires can be connected to the module:

- up to 2.5 mm^2 cross-section (from supply and interface side),
- up to 1.5 mm^2 cross-section (from input signal side).

Caution:

One must pay special attention to the correct connection of external signals (see fig. 2)

Caution:

Regarding electromagnetic interference one must use shielded wires to connect binary input signals and RS-485 interface signals. The shield must be connected to the protective terminal in one point.

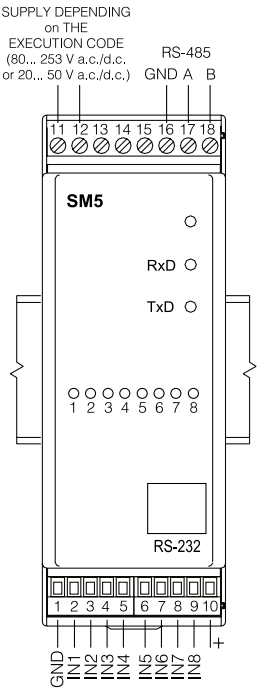

Fig 2. Electrical connections of SM5 logic input module

There are three diodes on the frontal plate:

- **green** - signals switching the supply on
- **green** (RxD) - signals data reception through the module
- **yellow** (TxD) - signals data transmission through the module

The „+” signal (terminal 10) is the 5 V output with admissible overload 100 mA. One must connect binary signals to the mass and appropriate output terminal.

The way to connect interfaces are shown on fig. 3 and 4. To obtain a correct transmission through the RS-485 interface it is necessany to connect lines A and B lines in parallel with their equivalents in other devices. The connection must be made with a shielded wire. The shield must be connected to a shielded wire. The shield must be connected to the protective terminal, in one point.

The **GND** line serves to equalize potentials of interface lines in the communicating devices.

To obtain the communication with the computer of PC class throught the RS-485 port, it is essential to apply an RS-232/RS-485 converter (e.g. PD51 from Lumel production) or an RS-485 interface card. Marking of transmission lines for the card in the PC computer depends on the card producer.

To obtain the connection through the RS-232 port, the added wire in the module set, is sufficent.

The module can be connected to a device of master type through one interface port. In case of the simultaneous connection of both ports, the module will work through the RS-232 interface

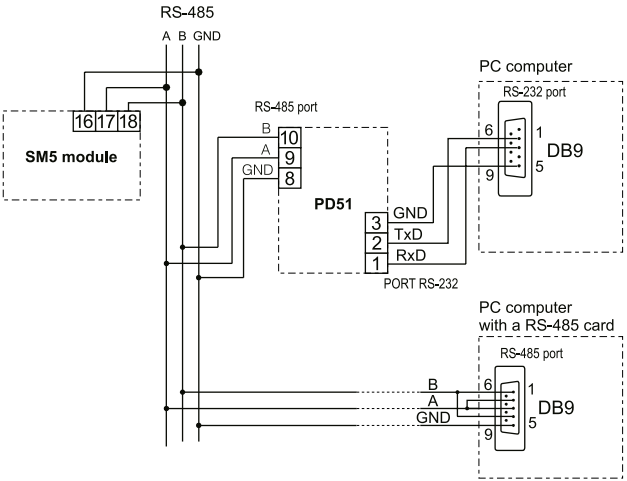

Fig. 3 Way of the RS-485 interface connection.

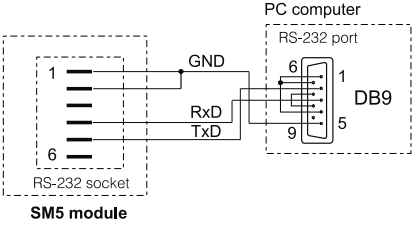

Fig. 4 Way of the RS-232 interface connection.

5. SERVICE

After connecting external signals and switching the supply on, the SM5 module is ready to work.

The lighted green diode signals the module work. The green diode (RxD) signals the module polling, however the yellow diode (TxD) signals the module response. Diodes should ignite in cycles during the data transmission, through the RS-232 or the RS-485 interface. Programmable parameters of the module can be programmed by means of RS-232 or RS-485 ports.

The RS-232 port has constant transmission parameters acc. to technical data, what enables the connection to the module even when programmed parameters of the digital RS-485 output (address, mode, rate) are unknown

The RS-485 standard allows to the direct connection to 32 devices on a single serial link up to 1200 m. To connect a greater number of devices it is necessary to use additional intermediate-separating systems (e.g. the PD51 converter/repeater).

5.1. Description of MODBUS protocol implementation

The transmission protocol describes ways of the information exchange between devices through serial links.

The MODBUS protocol has been implemented in the module in accordance with the PI-MBUS-300 Rev G specification of the Modicon company.

Set of parameters of the module serial link in the MODBUS protocol:

- module address - 1... 247
- baud rate - 2400, 4800, 9600, 19200, 38400, 57600, 115200 bit/s
- working modes - ASCII, RTU

- information unit - ASCII: 8N1, 7E1, 7O1
  - RTU: 8N2, 8E1, 8O1, 8N1
- maximal response time - 300 ms.

The parameter configuration of the serial link is described in the further part of the user's manual. It consists on establishing the baud rate (**baud** parameter), device address (**Adr** parameter) and the information unit type (**Mode** parameter).

In case of the module connection with the computer through the RS-232 wire, the module set automatically following transmission parameters:

Baud rate: **9600 bps,**

Working mode: **RTU 8N1,**

Address: **1.**

Notice: Each module connected to the communication network must:

- have a unique address, different from addresses of other devices connected to the network,
- identical baud rate and information unit type,
- the message sent with the address „0" is identified as the data transmission mode (transmission to many devices).

5.2. Description of the MODBUS protocol function

Following functions of the MODBUS protocol have been implemented in the SM5 module.

Description of MODBUS protocol functions Table 2

Code	***Signification***
02 (02h)	Readout of n-bit registers
03 (03h)	Readout of n-register
04 (04h)	Write of n-input registers
06 (06h)	Write of a single register
16 (10h)	Write of n-registers
17 (11h)	Slave device identification

Readout of n-registers (code 02h)

The function is not accessible in the broadcast mode.

Example: Readout of 8 bit registers beginning by the register with the 07D0h (2000) address

Request:

Device address	Function	Register address		Number of registers		Checksum CRC
		Hi	Lo	Hi	Lo	
01	02	07	D0	00	08	7941

Answer:

Device address	Function	Number of bytes	Value from the register 2200 - 2207	Checksum CRC
01	02	01	01	6048

Readout of n-registers (code 03h)

The function is not accessible in the broadcast mode.

Example: Readout of 2 registers with 1DBDh (7613) address:

Request:

Device address	Function	Register address Hi	Register address Lo	Number of registers Hi	Number of registers Lo	Checksum CRC
01	03	1D	BD	00	02	52 43

Answer:

Device address	Function	Number of bites	Value from the register 1DBD (7613)				Value from the register 1DBE (7614)				Checksum CRC
01	03	08	3F	80	00	00	40	00	00	00	42 8B

Readout of n-input registers (code 04h)

The function is not accessible in the broadcast mode.

Example: readout of 1 register with the 0FA3h (4003) address

Request:

Device address	Function	Register address Hi	Register address Lo	Number of registers Hi	Number of registers Lo	Checksum CRC
01	04	0F	A3	00	01	C2 FC

Answer:

Device address	Function	Number of bytes	Value from the register 0FA3 (4003)		Checksum CRC
01	04	02	00	01	78 F0

Write of values in the register (code 06h)

The function is accessible in broadcast mode.

Example: Write of the register with 1DBDh (7613) address

Request:

Device address	Function	Register address Hi	Register address Lo	Value from the register 1DBD (7613)				Checksum CRC
01	06	1D	BD	3F	80	00	00	85 AD

Answer:

Device address	Function	Register address Hi	Register address Lo	Value from the register 1DBD (7613)				Checksum CRC
01	06	1D	BD	3F	80	00	00	85 AD

Write into n-registers (code 10h)

The function is accessible in the data transmission mode.

Example: Write 2 registers beginning from the register with 1DBDh (7613) address.

Request:

Device address	Function	Register address		Number of registers		Number of bytes	Value from the register 1DBD (7613)				Value from the register 1DBE (7614)				Check-sum CRC
		Hi	Lo	Hi	Lo										
01	10	1D	BD	00	02	08	3F	80	00	00	40	00	00	00	03 09

Answer:

Device address	Function	Register address Hi	Register address Lo	Number of registers Hi	Number of registers Lo	Checksum (CRC)
01	10	1D	BD	00	02	D7 80

Report identifying the device (code 11h)

Request:

Device address	Function	Checksum (CRC)
01	11	C0 2C

Answer:

Device address	Function	Number of bytes	Device identifier	Device state	Software version number	Checksum
01	11	06	8D	FF	XXXX	

Device address - depends on the set value,

Function - function number: 0x11,

Number of bytes - 0x08

Device identifier - 0x8F

Device state - 0xFF

No of the software version - software version implemented in the module:1.00

software XXXX - 4-byte variable of float type

Checsum - 2 bytes, in case of work in the RTU mode
- 1 byte, in case of work in the ASCII mode

Example:

The work in **RTU** mode, e.g.: **Mode = RTU 8N2** (value 0x02 in case of readout/write through the interface).
Device address set on **Adr=0x01**,

For the SM5 module, the response frame has the following shape:

Device address	Function	Number of bytes	Device identifier	Device state	Nunber of softwer wersion	Checksum CRC
01	11	06	8E	FF	3F 80 00 00	AE 1B

Jest to moduł SM5, wersja oprogramowania 1.00

5.3. Register map of the module

Register map of SM5 module series Table 2

Address range	Value type	Description
2000-2007	bool (1 bit)	The value is located in 1-bit register. Registers can be read out and written.
4000-4100	integer (16 bitów)	The value is located in 16-bit registers. The register content corresponds to the 32-bit register contents from the 7500 area. Registers are only for readout.
4200-4300	integer (16 bitów)	The value is located in 16-bit registers. The register content corresponds to the 32-bit register contents from the 7600 area. Registers can be read out and written.
7500-7600	float (32 bity)	The value is located in the 2-bit register. Registers are only for readout.
7600-7700	float (32 bity)	The value is located in the 32-bit register. Registers can be read out and written.

5.4. Set of module registers

Set of registers for readout the SM5 module — Table 3

The value is placed in 1-bytes registers. These registers content corresponds to the content of 32-bit registers from the area 7500.	The value is placed in 16-bytes registers. These registers content corresponds to the content of 32-bit registers from the area 7500.	The value is placed in 32-bytes registers.	Name	Write (w)/Readout (r)	Unit	Quantity name
	4000	7500	**Identifier**	o	–	Constant identifying the device
	4001	7501	**Status 1**	o	–	Status 1 is a register describing current states of binary inputs.
	4002	7502	**Status 2**	o	–	Status 2is a register describing current transmission parameters.
2000	4003	7503	**W1**	o	–	Value of read out state of input 1
2001	4004	7504	**W2**	o	–	Value of read out state of input 2
2002	4005	7505	**W3**	o	–	Value of read out state of input 3
2003	4006	7506	**W4**	o	–	Value of read out state of input 4
2004	4007	7507	**W5**	o	–	Value of read out state of input 5
2005	4008	7508	**W6**	o	–	Value of read out state of input 6
2006	4009	7509	**W7**	o	–	Value of read out state of input 7
2007	4010	7510	**W8**	o	–	Value of read out state of input 8

Description of the Status1 register

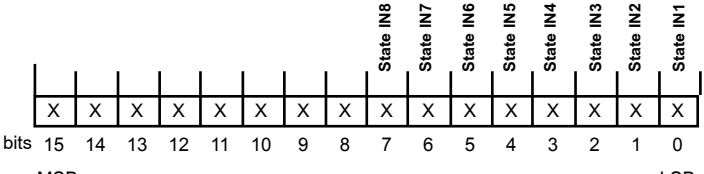

Bit-15...8 not used
State 0

Bit- 0 State of IN 1 input
0 - open
1 - shorting

Bit- 1 State of IN 2 input
0 - open
1 - shorting

Bit- 2 State of IN 3 input
0 - open
1 - shorting

Bit- 3 State of IN 4 input
0 - open
1 - shorting

Bit- 4 State of IN 5 input
0 - open
1 - shorting

Bit- 5 State of IN 6 input
0 - open
1 - shorting

Bit- 6 State of IN 7 input
0 - open
1 - shorting

Bit- 7 State of IN 8 input
0 - open
1 - shorting

Description of the Status 2 register

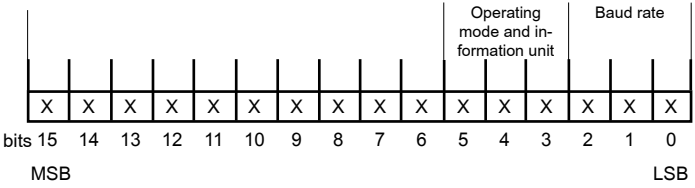

Bit-15...6 Not used

Their States are free

Bit-5...3 Operating mode and information unit

000 - interface switched off
001 - 8N1 - ASCII
010 - 7E1 - ASCII
011 - 7O1 - ASCII
100 - 8N2 - RTU
101 - 8E1 - RTU
110 - 8O1 - RTU
111 - 8N1 - RTU

Bit-2...0 Baud rate

000 - 2400 bit/s
001 - 4800 bit/s
010 - 9600 bit/s
011 - 19200 bit/s
100 - 38400 bit/s
101 - 57600 bit/s
110 - 115200 bit/s

Set of registers for SM5 module readout and write Table 4

The value is placed in 16-bytes registers. These registers content corresponds to the content of 32-bit registers from the area 7600.	The value is placed in 32-bit registers.	Symbol	Write (w)/Readout (r)	Range	Description
4200	7600	**Identifier**	r	8D	Device identifier
4201	7601	**Rate**	w/r	0... 6	Baud rate of the RS-485 interface (bit/s)
					Value |
					0 | 2400
					1 | 4800
					2 | 9600
					3 | 19200
					4 | 38400
					5 | 57600
					6 | 115200
4202	7602	**Mode**	w/r	0... 7	Kind of transmission via the RS-485 interface
					Value |
					0 | Interface switched off
					1 | ASCII 8N1
					2 | ASCII 7E1
					3 | ASCII 7O1
					4 | RTU 8N2
					5 | RTU 8E1
					6 | RTU 8O1
					7 | RTU 8N1
4203	7603	**Address**	w/r	1... 247	Device address
4204	7604	**Apply**	w/r	0... 1	Register confirming changes of transmission parameters

6. TECHNICAL DATA

Logic levels	1 logic: shorted input 0 logic: open input shorting resistance of the contact without potential ≥ 10 kΩ opening resistance of the contact without potential ≥ 150 kΩ
Transmission data:	
a) RS-485 interface:	
- transmission protocol	MODBUS
- ASCII:	8N1, 7E1, 7O1
- RTU:	8N2, 8E1, 8O1, 8N1
- baud rate:	2400, 4800, 9600, 19200, 38400, 57600, 115200 bit/s
- address:	1... 247
b) RS-232 interface:	
- transmission protocol	MODBUS
- RTU:	8N1
- baud rate:	9600 bit/s
- address:	1
Power consumption by the module	≤ 1.5 VA
Rated operation conditions:	
- supply voltage	10...24...50 V a.c./d.c. or 85...230...253 V a.c./d.c.
- Supply voltage frequency	40...50/60...440 Hz
- ambient temperature	-20...23...55°C
- relative humidity	< 95% (inadmissible condensation)
- external magnetic field	< 400 A/m
- work position	any
Storage and transport conditions:	
- ambient temperature	- 20... 70°C
- relative humidity	< 95% (inadmissible condensation)
Ensured protection grade:	
- from the housing	IP 40
- from terminal side	IP 20

Dimensions	45 x 120 x 100 mm
Weight	< 0.25 kg
SM5 housing	adapted to be mounted on a 35 mm rail acc. to EN 60715

Electromagnetic compatibility:

- Immunity	acc. to EN 61000-6-2
- emission	acc. to EN 61000-6-4

Safety requirements acc.to EN 61010-1:

- installation category	III
- pollution grade	2

maximal phase-to-earth work voltage:

- for the supply circuit	300 V
- for other circuits	50 V

7. BEFORE A FAILURE WILL BE DECLARED

In case of incorrect symptoms please to acquaint with the table below.

SYMPTOMS	PROCEDURE	REMARKS
1. The green diode is off.	Check the connection of the network cable	
2. The module does not communicate with the device master via the RS-232 port. Lack of transmission signalling on RxD and TxD diodes.	Check if the wire is connected to the appropriate module socket. Check if the device master is set on 9600 baud rate, 8N1 mode and address 1.	(RS-232 has constant transmission parameters)
3. The module does not communicate with the device master via the RS-485 port. Lack of transmission signalling on RxD and TxD diodes.	Check if the wire is connected to the appropriate module terminal. Check if the device master is set on the same transmission parameters as the module (baud rate, mode, address). In case of necessity to change transmission parameters when we cannot communicate through RS-485 one can use the RS-232 port which has constant transmission parameters (in case of further problems, see the section 2). After changing e RS-485 parameters into the required one, one can switch over on RS-485 port.	

8. ORDERING CODES

Table 5

Module of 8 binary inputs - SM5	X	XX	X
Supply voltage:			
85...230...253 V a.c./d.c.	**1**		
20...24...50 V a.c./d.c.	**2**		
on order *	**X**		
Kind of version:			
catalogue		**00**	
custom -made *		**XX**	
Acceptance tests:			
without extra requirements			**8**
with an extra quality inspection certificate			**7**
other requirements agreed with the manufacturer*			**X**

* code numbering is settled by the manufacturer.

Example of order

SM5 1 00 7 code means:

- **SM5** - Module of 8 binary inputs
- **1** - supply: 85...230...253 V a.c/d.c.
- **00** - catalogue version
- **7** - with an extra quality inspection certificate

LUMEL S.A.
ul. Słubicka 4, 65-127 Zielona Góra, Poland
tel.: +48 68 45 75 100, fax +48 68 45 75 508
www.lumel.com.pl

Technical support:
tel.: (+48 68) 45 75 143, 45 75 141, 45 75 144, 45 75 140
e-mail: export@lumel.com.pl

Export department:
tel.: (+48 68) 45 75 130, 45 75 131, 45 75 132
e-mail: export@lumel.com.pl

Calibration & Attestation:
e-mail: laboratorium@lumel.com.pl

SM5-09C