E30443

IO-Link display

IO-LINK MASTER DISPLAY 1,44

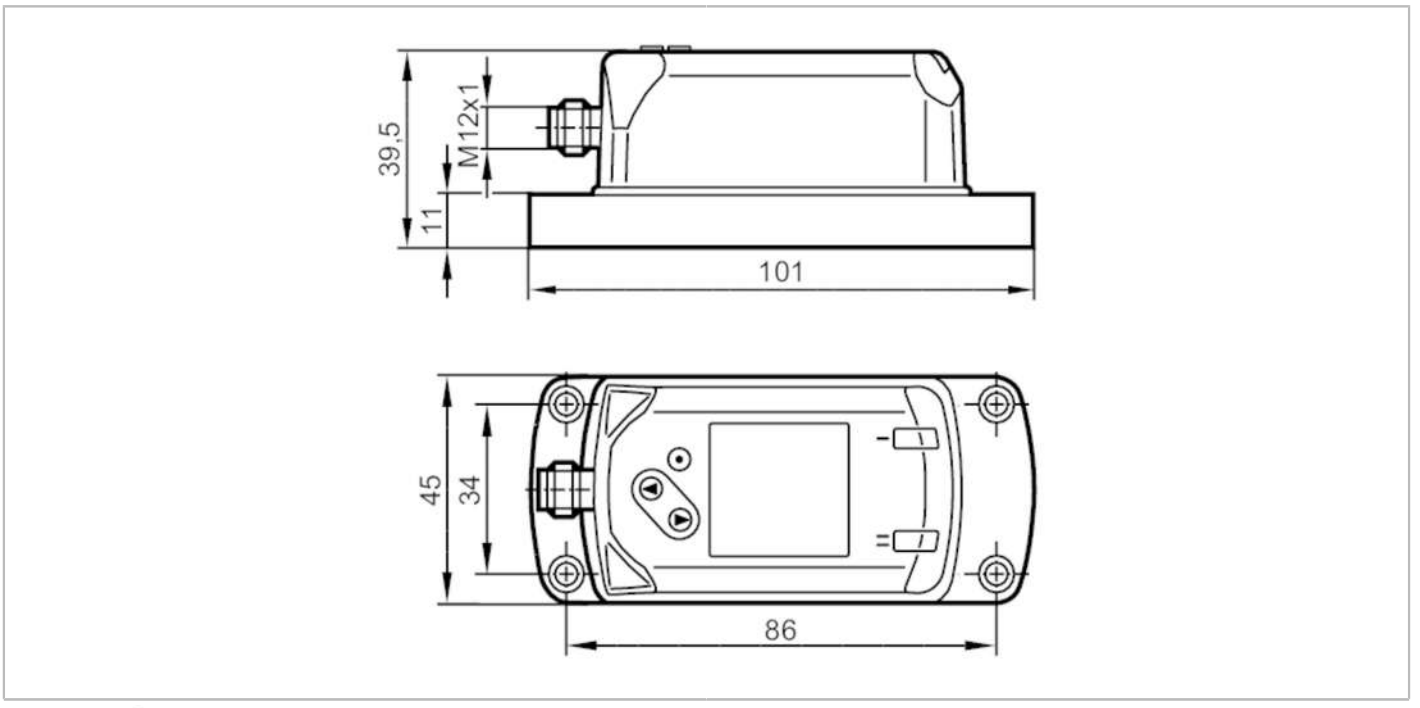

Application		
Special feature		Gold-plated contacts
Application		display of all process values of the sensors connected to the same master
Electrical data		
Operating voltage	[V]	18...30 DC
Current consumption	[mA]	< 47
Min. insulation resistance	[MΩ]	100; (500 V DC)
Protection class		III
Reverse polarity protection		yes
Software / programming		
Parameter setting options		display, indication
Interfaces		
Communication interface		IO-Link
Transmission type		COM3 (230,4 kBaud)
IO-Link revision		1.1
SDCI standard		IEC 61131-9
Profiles		Smart Sensor - SSP 0 / Generic Profiled Sensor
		Function / Device identification
		Function / Device diagnosis
SIO mode		no
Required master port type		A
Min. process cycle time	[ms]	2.3
Supported DeviceIDs		**Type of operation** / **DeviceID**
		default / 824

E30443

IO-Link display

IO-LINK MASTER DISPLAY 1,44

Operating conditions			
Ambient temperature	[°C]	-10...60	
Storage temperature	[°C]	-20...80	
Protection		IP 65; IP 67	
Tests / approvals			
EMC		DIN EN 61000-6-2	
		DIN EN 61000-6-4	
Shock resistance		DIN EN 60068-2-27	5 g (11 ms)
Vibration resistance		DIN EN 60068-2-6	5 g (10...50 Hz)
MTTF	[years]	398	
Mechanical data			
Weight	[g]	171.5	
Housing		rectangular	
Dimensions	[mm]	86 x 45 x 39.5	
Materials		stainless steel (316L/1.4404); PC; PBT-GF30; PPS; FKM;	
Displays / operating elements			
Display			colour display 1,44", 128 x 128 pixels
			2 x LED, yellow
Remarks			
Pack quantity		1 pcs.	

Electrical connection - plug

Connector: 1 x M12; coding: A; Contacts: gold-plated



E30443

IO-Link display

IO-LINK MASTER DISPLAY 1,44

Connection

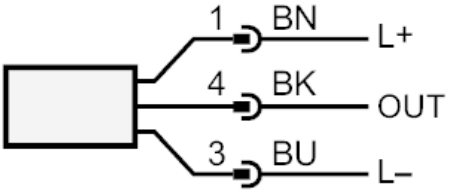

colours to DIN EN 60947-5-2
Core colours :

BK =	black
BN =	brown
BU =	blue