Mini / Multicolour

MC55 RGB Blinking Buzzer Cable 10-30VDC



Part No.: 240.130.50

CE RoHS

MECHANICAL DATA	
Height	71 mm
Diameter	55 mm
Materials	PC PC/ABS
Dome colour	Clear
Housing colour	Black
Protection category	IP65
Connection	Cable
Cable length	1450 mm
Tension relief	Pull-out protection
Type of fixing	Built-in mounting
Service life optical	50,000 h maximum
Acoustic service life	5,000 h minimum
Working temperature minimum	-20°C
Working temperature maximum	+50°C
Weight with packaging	120 g
Product weight	120 g

ELECTRICAL DATA	
Operating voltage	10-30V
Operating voltage type	DC
Operating voltage tolerance	+/- 0%
Rated operational voltage	24 VDC
Rated operational current	80 mA
Rated inrush current	<700mA
Protection class	Protection class 2
Pollution degree	3 In the connection area: 2

OPTICAL DATA	
Light source	LED
Light colour	MC 7 colours
Optical signal image	Blink Permanent
Blink frequency (Hz)	1 Hz

ACUSTICAL DATA	
Volume/dB(max) at 1m distance	85,0 dB (A)
Acoustic signal image	Pulse tone
Number of tones	1 tone

! For additional installation and mounting information, refer to the appropriate user guide at www.werma.com. This printed copy is for information only and is subject to alteration.

Mini / Multicolour

MC55 RGB Blinking Buzzer Cable 10-30VDC

Audio frequency	3400 Hz

DRAWING

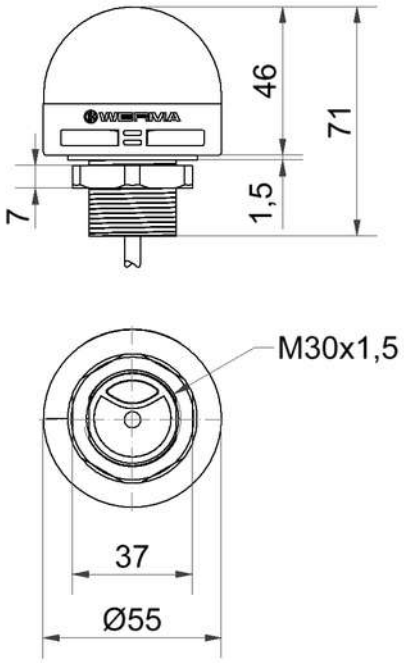

! For additional installation and mounting information, refer to the appropriate user guide at www.werma.com. This printed copy is for information only and is subject to alteration.