

Key operation

Part no. S-T0
Article no. 086709

Includes two keys

Delivery programme

Product range			Accessories
			Locking arrangements
Protection type			Front IP53
Information about equipment supplied			with two keys
			KMS 1 lock mechanism: individual lock mechanism, not suitable for master key systems Key withdrawable in all positions
For use with			T0-…/E, …/I1, …/Z T3-…/E, …/Z T3-…/I2 P1-…/E, …/I2, …/Z
Key withdrawal			Key withdrawal positions can be programmed by the user

Notes

The key replaces the thumb-grip, cannot be switched without key. The switch position indication in on the lock. Normally the key is withdrawable in every position.

With the ordering of a rotary switch with front plate FS908 together with key operation the key is only withdrawable in the 0 position.

The key removability can be changed (also retro) with the locking cam "VR-T0".

With retrofitting of key operation the existing front plate of the rotary switch must be used.

Key →#256151

Technical data ETIM 4.0

Number of auxiliary contacts as normally open contact			0
Number of auxiliary contacts as normally closed contact			0
Rated permanent current Iu		A	0
Number of poles			0
Conditioned rated short-circuit current Iq		kA	0
Degree of protection (IP), front side			-
Number of auxiliary contacts as change-over contact			0
Interlockable			No
Motor drive integrated			No
Connection type main current circuit			-
Version as emergency stop installation			No
Type of control element			Key
Version as main switch			No
Version as switch disconnector compact			No
Version as safety switch			No
Version as maintenance-/service switch			No
Rated operation power at AC-23, 400V		kWh	0
Rated operation power AC-3, 400 V		kWh	0
Suitable for ground mounting			No
Suitable for front mounting			No
Suitable for front mounting center			No
Suitable for distribution board installation			No
Suitable for intermediate mounting			No
Max. rated operation voltage Ue AC		V	0
Motor drive optional			No
Voltage release optional			No
Device construction			-

Dimensions

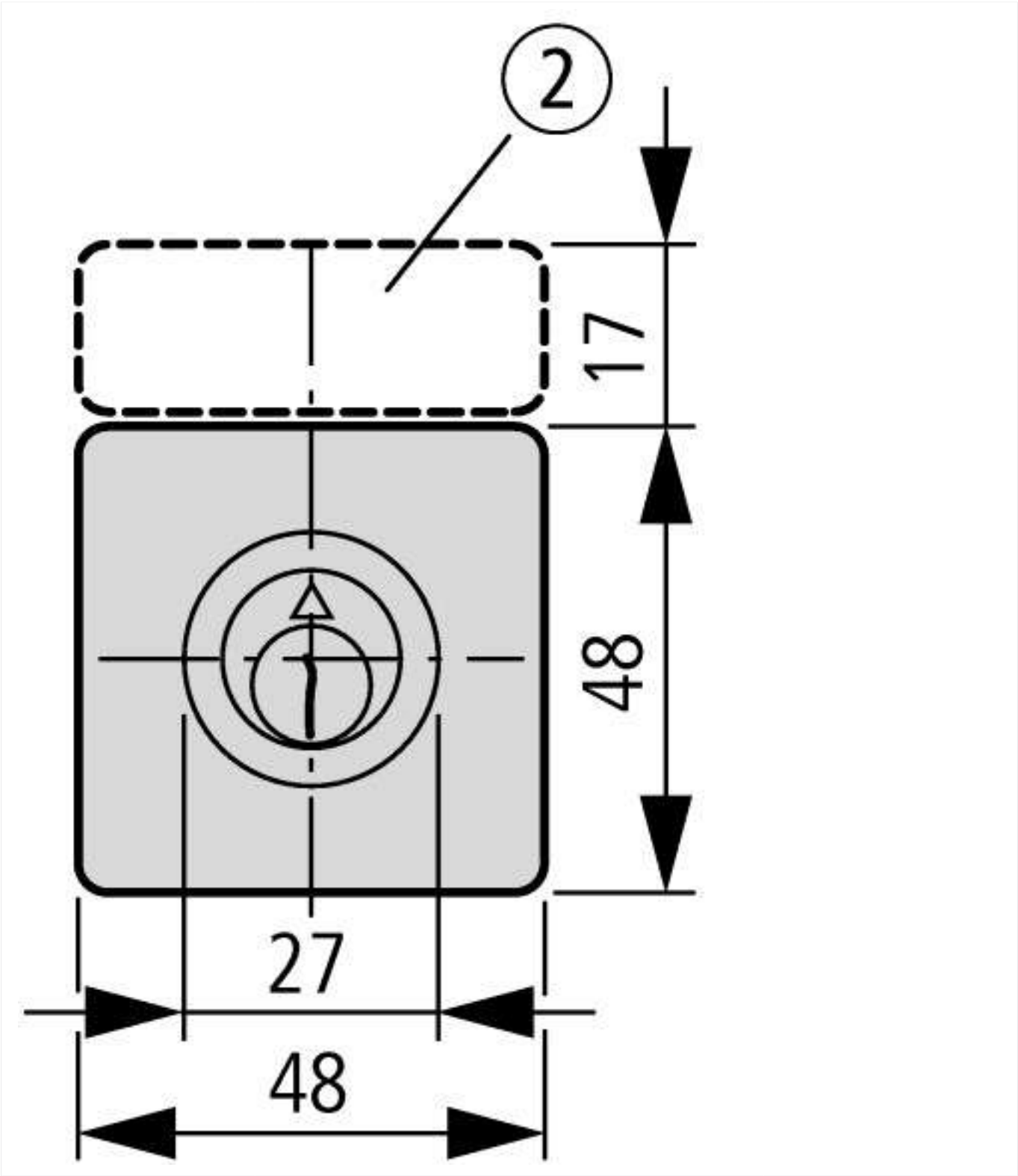
2
17
48
27
48

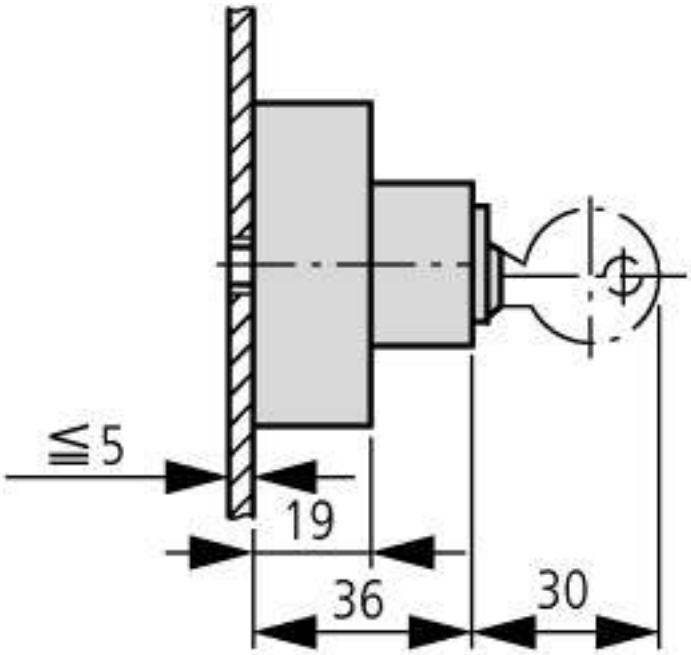

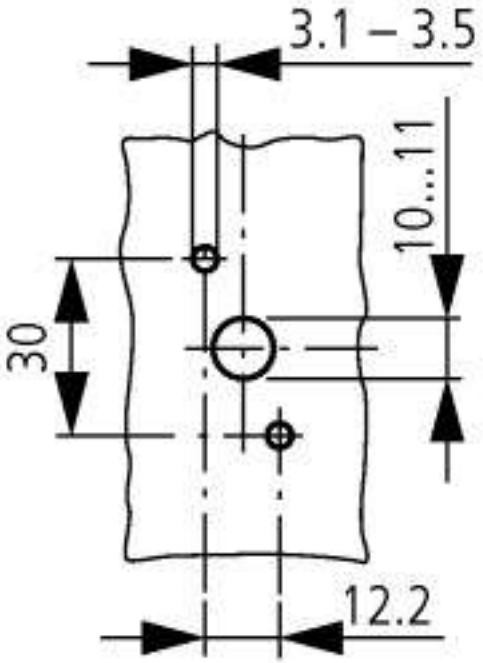

T0-…/E(I1) + S-(SOND-)T0
T3-…/E(I2) + S-(SOND-)T0

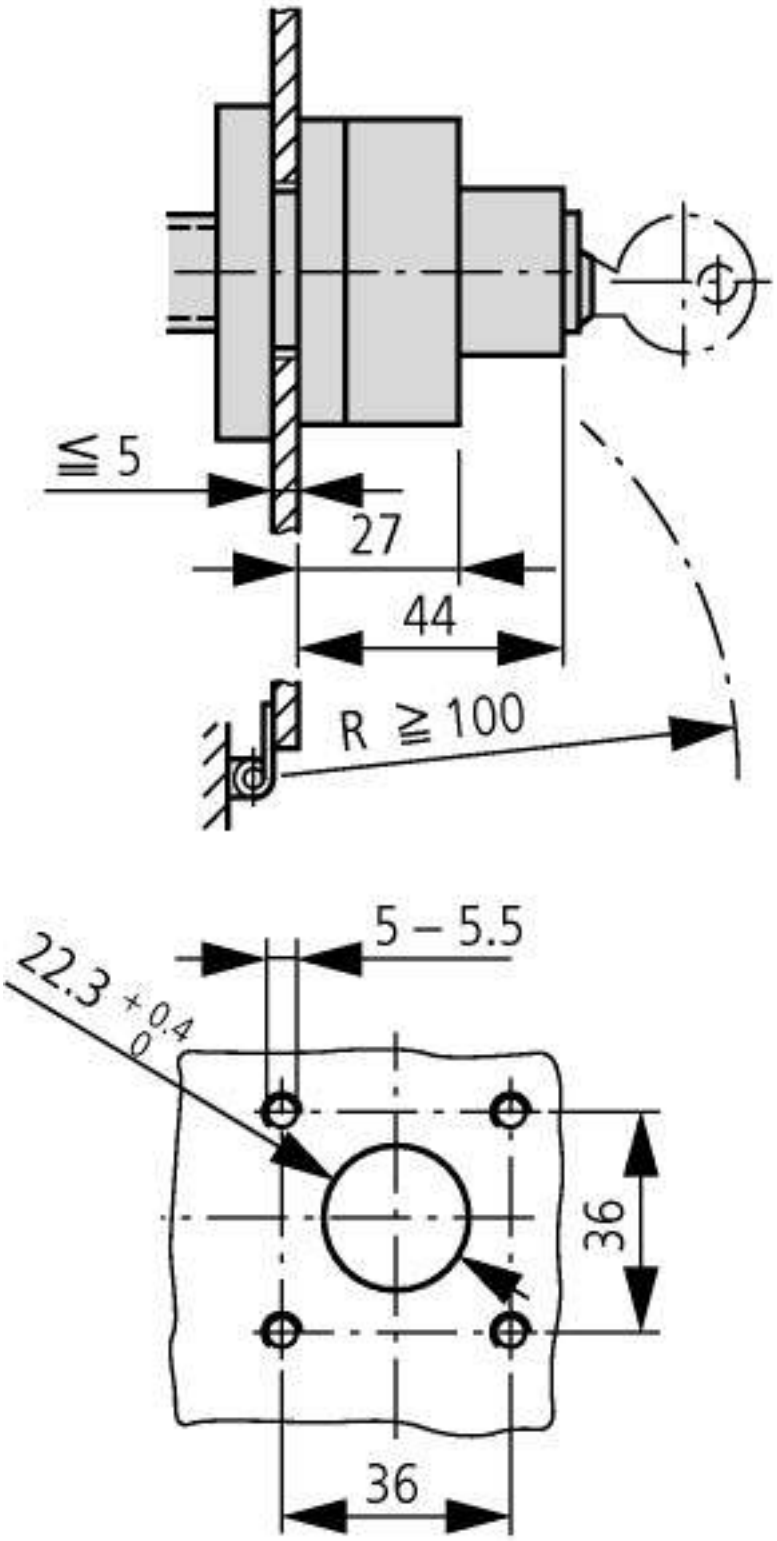

T0-…/Z + S-(SOND-)T0
T3-…/Z + S-(SOND-)T0

© 05/2012 by Eaton Industries GmbH