IS5071

Inductive sensor

IS-3004-BPKG/AS

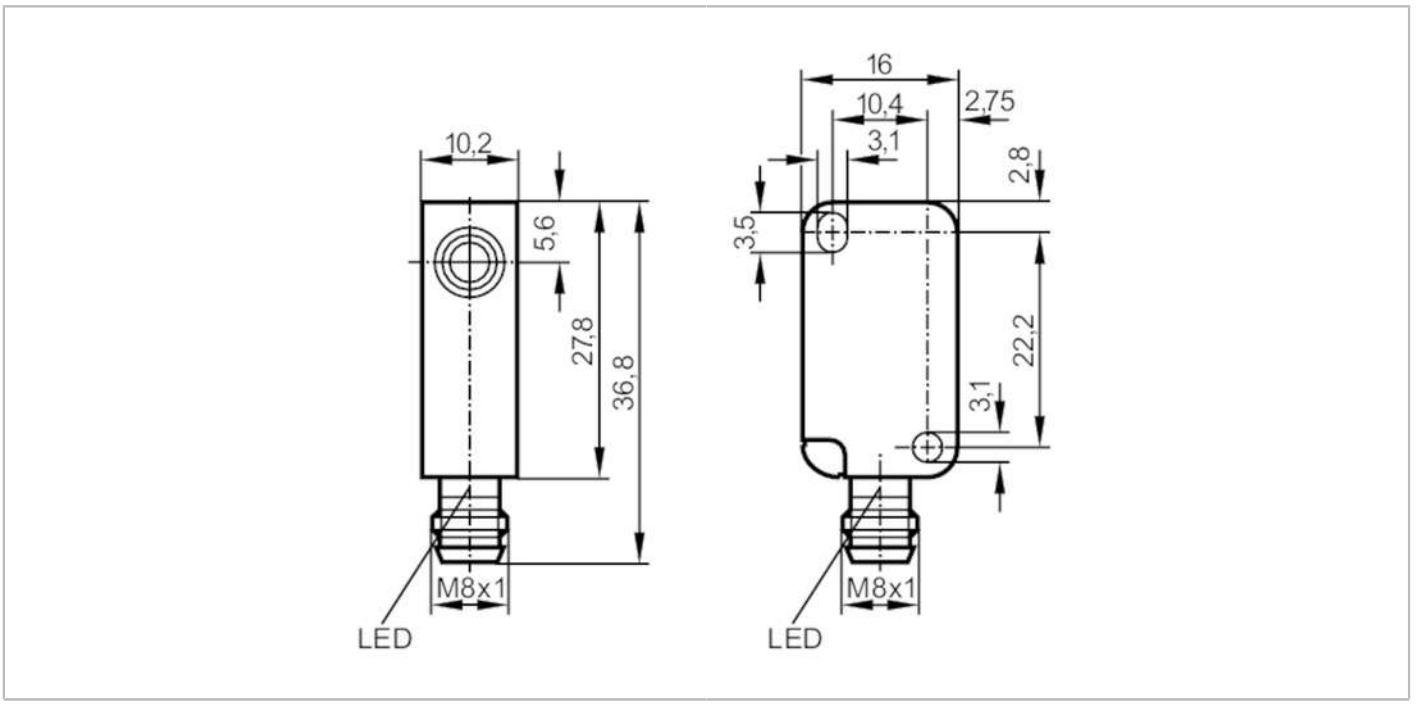

Product characteristics		
Electrical design		PNP
Output function		normally open
Sensing range	[mm]	4
Housing		rectangular
Dimensions	[mm]	28 x 10 x 16
Electrical data		
Operating voltage	[V]	10...30 DC
Current consumption	[mA]	15
Protection class		III
Reverse polarity protection		yes
Outputs		
Electrical design		PNP
Output function		normally open
Max. voltage drop switching output DC	[V]	2.5
Permanent current rating of switching output DC	[mA]	200
Switching frequency DC	[Hz]	2000
Short-circuit protection		yes
Overload protection		yes
Detection zone		
Sensing range	[mm]	4
Real sensing range Sr	[mm]	4 ± 10 %
Operating distance	[mm]	0...3.25

IS5071

Inductive sensor

IS-3004-BPKG/AS

Accuracy / deviations			
Hysteresis	[% of Sr]	1...15	
Operating conditions			
Ambient temperature	[°C]	-25...70	
Protection		IP 65; (with ifm socket duly screwed on: IP 67)	
Tests / approvals			
EMC		EN 60947-5-2	
MTTF	[years]	3076	
UL approval		Ta	-25...70 °C
		Enclosure type	Type 1
		power supply	Class 2
		File number UL	E174191
Mechanical data			
Weight	[g]	8.5	
Housing		rectangular	
Mounting		non-flush mountable	
Dimensions	[mm]	28 x 10 x 16	
Materials		PBT; PC	
Tightening torque	[Nm]	< 0.5; (with washer)	
Displays / operating elements			
Display		switching status	4 x 90° LED, yellow
Remarks			
Pack quantity		1 pcs.	

Electrical connection - plug

Connector: 1 x M8; coding: A



IS5071

Inductive sensor

IS-3004-BPKG/AS

Connection

