# SV7200

## Vortex flow meter with display

SVR34XXXIRKG/US-100

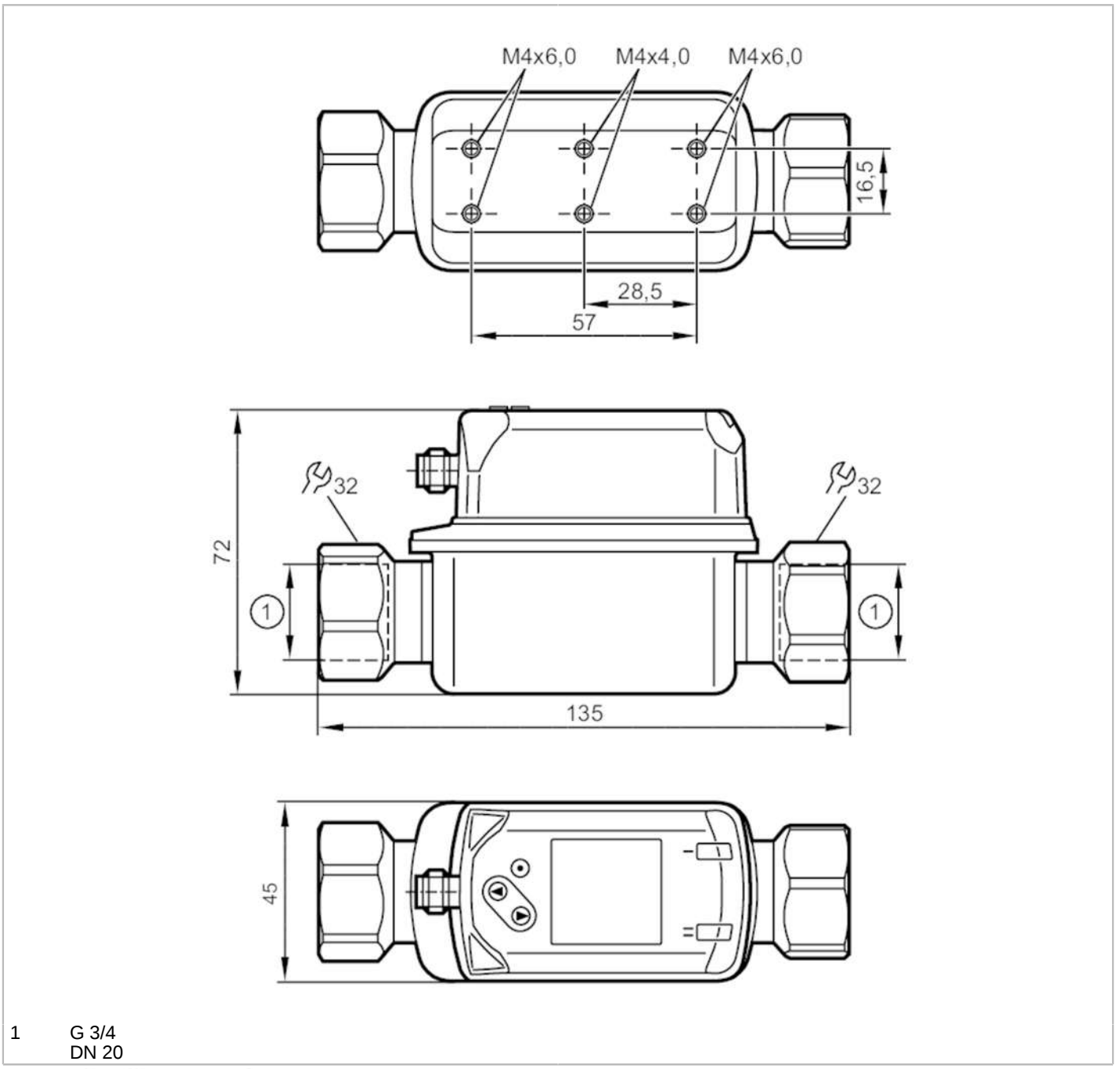


1 G 3/4
DN 20

| Product characteristics | | | |
|---|---|---|---|
| Number of inputs and outputs | | Number of digital outputs: 2 | |
| Measuring range | | 5...100 l/min | 0.3...6 m³/h |
| Process connection | | threaded connection G 3/4 internal thread DN20 | |

| Application | | |
|---|---|---|
| Special feature | | Gold-plated contacts |
| Application | | for industrial applications |
| Media | | water; glycol solutions; coolants |
| Medium temperature | [°C] | -10...90 |

# SV7200

## Vortex flow meter with display

SVR34XXXIRKG/US-100

| | | | |
|---|---|---|---|
| Pressure rating | | 12 bar | 1.2 MPa |
| Note on pressure rating | | up to 40 °C | |
| MAWP (for applications according to CRN) | [bar] | 4.3 | |
| **Electrical data** | | | |
| Operating voltage | [V] | 18...30 DC | |
| Current consumption | [mA] | < 30 | |
| Min. insulation resistance | [MΩ] | 100;  (500 V DC) | |
| Protection class | | III | |
| Reverse polarity protection | | yes | |
| Power-on delay time | [s] | < 3 | |
| Measuring principle | | Vortex | |
| **Inputs / outputs** | | | |
| Number of inputs and outputs | | Number of digital outputs: 2 | |
| **Outputs** | | | |
| Total number of outputs | | 2 | |
| Output signal | | switching signal; frequency signal; IO-Link;  (configurable) | |
| Electrical design | | PNP/NPN | |
| Number of digital outputs | | 2 | |
| Output function | | normally open / normally closed;  (parameterisable) | |
| Max. voltage drop switching output DC | [V] | 2.5 | |
| Permanent current rating of switching output DC | [mA] | 100 | |
| Short-circuit protection | | yes | |
| Overload protection | | yes | |
| **Measuring/setting range** | | | |
| Measuring range | | 5...100 l/min | 0.3...6 m³/h |
| Display range | | 0...120 l/min | 0...7.2 m³/h |
| Resolution | | 0.5 l/min | 0.02 m³/h |
| Set point SP | | 6...100 l/min | 0.36...6 m³/h |
| Reset point rP | | 5...99 l/min | 0.3...5.94 m³/h |
| Frequency end point, FEP | | 20...100 l/min | 1.2...6 m³/h |
| In steps of | | 0.5 l/min | 0.02 m³/h |
| Frequency at the end point FRP | [Hz] | 100...1000 | |
| Measuring dynamics | | 1:20 | |
| Temperature monitoring | | | |
| Measuring range | [°C] | -10...90 | |
| Display range | [°C] | -30...110 | |
| Resolution | [°C] | 0.5 | |
| Set point SP | [°C] | -9...90 | |
| Reset point rP | [°C] | -10...89 | |
| In steps of | [°C] | 0.5 | |
| Frequency start point, FSP | [°C] | -10...70 | |
| Frequency end point, FEP | [°C] | 10...90 | |

# SV7200

## Vortex flow meter with display

SVR34XXXIRKG/US-100

| | | | |
|---|---|---|---|
| Frequency at the end point FRP | [Hz] | 100...1000 | |
| **Accuracy / deviations** | | | |
| Flow monitoring | | | |
| Accuracy (in the measuring range) | | ± 2 % MEW; (water) | |
| Repeatability | | ± 0,5 % MEW | |
| Temperature monitoring | | | |
| Accuracy | [K] | ± 1 | |
| **Response times** | | | |
| Flow monitoring | | | |
| Response time | [s] | 1; (dAP = 0) | |
| Damping process value dAP | [s] | 0...5 | |
| Temperature monitoring | | | |
| Dynamic response T05 / T09 | [s] | T09 = 6 | |
| **Software / programming** | | | |
| Parameter setting options | | hysteresis / window; normally open / normally closed; switching logic; frequency output; switch-on/switch-off delay; Damping; Display unit | |
| **Interfaces** | | | |
| Communication interface | | IO-Link | |
| Transmission type | | COM2 (38,4 kBaud) | |
| IO-Link revision | | 1.1 | |
| SDCI standard | | IEC 61131-9 | |
| Profiles | | Smart Sensor: Process Data Variable; Device Identification, Device Diagnosis | |
| SIO mode | | yes | |
| Required master port type | | A | |
| Process data analogue | | 2 | |
| Process data binary | | 2 | |
| Min. process cycle time | [ms] | 3 | |
| Supported DeviceIDs | | **Type of operation** | **DeviceID** |
| | | default | 492 |
| **Operating conditions** | | | |
| Ambient temperature | [°C] | 0...60 | |
| Note on ambient temperature | | medium temperature < 80 °C | |
| | | medium temperature < 90 °C: 0...50 °C | |
| Storage temperature | [°C] | -20...80 | |
| Protection | | IP 65; IP 67 | |
| **Tests / approvals** | | | |
| EMC | | DIN EN 61000-6-2 | |
| | | DIN EN 61000-6-3 | |

# SV7200

## Vortex flow meter with display

**SVR34XXXIRKG/US-100**

| | | | |
|---|---|---|---|
| CPA approval | | model number | 001VO |
| | | accuracy class | - |
| | | maximum allowable error | ± 2 % FS |
| | | Q (min) | 0,36 m³/h |
| | | Q (t) | 1,2 m³/h |
| | | Q (max) | 6 m³/h |
| Shock resistance | | DIN EN 60068-2-27 | 5 g (11 ms) |
| Vibration resistance | | DIN EN 60068-2-6 | with water / 10...50 Hz 1 mm |
| | | | with water / 50...2000 Hz 2 g |
| MTTF | [years] | 342 | |
| UL approval | | UL Approval no. | I001 |
| Pressure Equipment Directive | | Sound engineering practice; can be used for group 2 fluids; group 1 fluids on request | |

### Mechanical data

| | | | |
|---|---|---|---|
| Weight | [g] | 484.5 | |
| Housing | | rectangular | |
| Dimensions | [mm] | 135 x 45 x 72 | |
| Materials | | stainless steel (316L/1.4404); PC; PBT+PC-GF30; PPS; TPE-U | |
| Materials (wetted parts) | | stainless steel (316L/1.4404); ETFE; PA 6T; PPS; FKM | |
| Tightening torque | [Nm] | 30 | |
| Process connection | | threaded connection G 3/4 internal thread DN20 | |

### Displays / operating elements

| | | | |
|---|---|---|---|
| Display | | | colour display 1,44", 128 x 128 pixels |
| | | | 2 x LED, yellow |

### Remarks

| | |
|---|---|
| Remarks | MW = measured value |
| | MEW = Final value of the measuring range |
| Pack quantity | 1 pcs. |

### Electrical connection

Connector: 1 x M12; coding: A; Contacts: gold-plated



# SV7200

## Vortex flow meter with display

**SVR34XXXIRKG/US-100**

## Connection

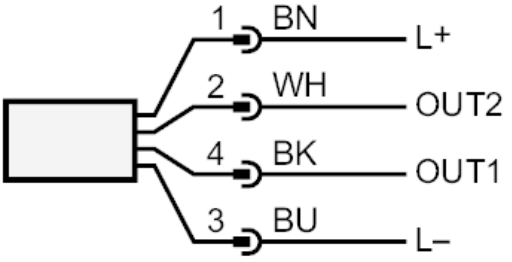


| | |
|---|---|
| OUT1: | Flow monitoring |
| - | switching output |
| - | frequency output |
| - | IO-Link |
| OUT2: | flow monitoring and temperature monitoring |
| - | switching output |
| - | frequency output |
| | colours to DIN EN 60947-5-2 |
| | Core colours : |
| BK = | black |
| BN = | brown |
| BU = | blue |
| WH = | white |

## Diagrams and graphs

Pressure loss

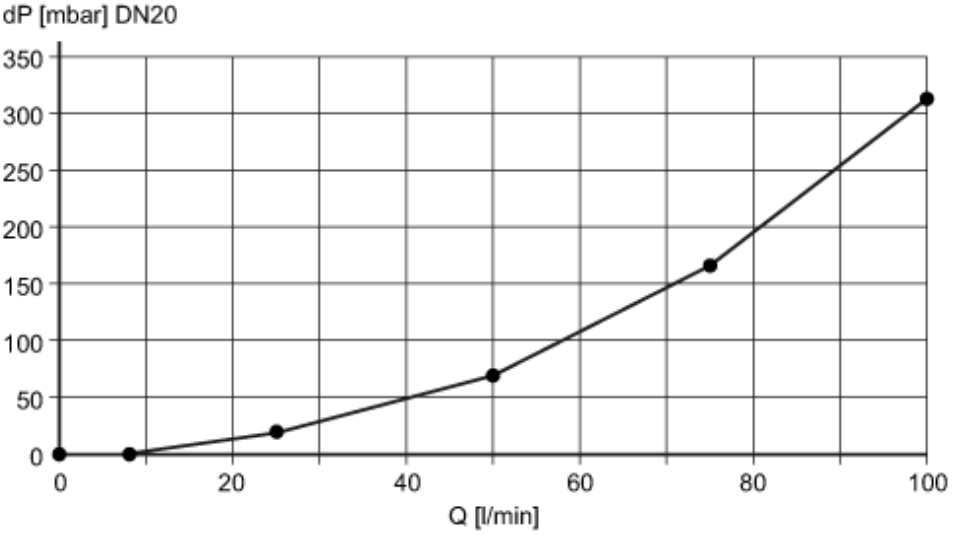


dP Pressure loss

Q volumetric flow quantity

# SV7200

## Vortex flow meter with display

**SVR34XXXIRKG/US-100**

pressure rating (bar)

