210993
OGUP 050 G3-T3
High-performance fork light barrier

- High function reserve
- Extremely dirt-resistant
- Collimator optics
- Metal casing
- Electronics integrated
- Sensitivity is adjustable
- Light/dark switching
- Bright ring LED
- High protection type



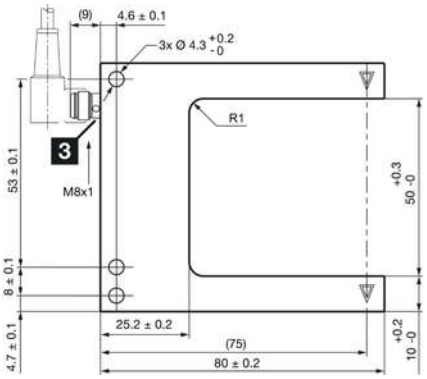

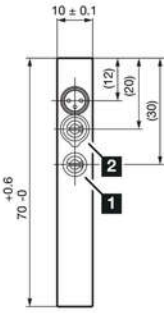

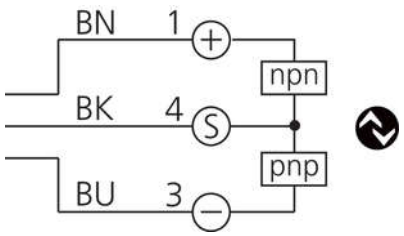

1) Potentiometer
2) NO/ NC
3) LED

BK: black
BN: brown
BU: blue

Function

Technical data (typ.)	+20°C, 24 V DC
Service voltage	10 … 30 V DC (Supply Class 2)
No-load current (max.)	30 mA
Insulation voltage endurance	500 V
Leg length internal	55 mm
Housing dimensions	70 x 80 x 10 mm
Housing length	80 mm
Housing height	70 mm
Housing width	10 mm
Housing material	Die-cast zinc (Black, powder-coated)
Protection class	III, operation on protective low voltage
Approvals	UL
Operating principle	Optical
Evaluation	digital
Design	Fork
Characteristics	High transmit power and dirt penetration
Switching output	Push-pull, 100 mA, NO/NC, switchable
Voltage drop (max.)	1 V
Interface	IO-Link
Light source	LED
Color	Infrared
Modulation	Clocked
Fork opening	50 mm

210993
OGUP 050 G3-T3
High-performance fork light barrier

Technical data (typ.)	+20°C, 24 V DC
Resolution (factory setting)	2 mm (POWER)
Reproducibility (factory setting)	0.03 mm (POWER)
Resolution (STANDARD)	0.3 mm
Reproducibility (STANDARD)	0.02 mm
Resolution (HIGH RESOLUTION)	0.2 mm
Reproducibility (HIGH RESOLUTION)	0.02 mm
Resolution (POWER)	2 mm
Reproducibility (POWER)	0.03 mm
Resolution (SPEED)	0.3 mm
Reproducibility (SPEED)	0.02 mm
Sensitivity adjustment	Potentiometer or IO-Link
Switching frequency (factory setting)	200 Hz (POWER)
Switching frequency (STANDARD)	5000 Hz
Switching frequency (HIGH RESOLUTION)	1500 Hz
Switching frequency (POWER)	200 Hz
Switching frequency (SPEED)	8000 Hz
Ambient temperature during operation	-25 … +60 °C
Protection type	IP 67
Connection	Connector, M8, 3-pin
Connection cable	TK …

More information / accessories	https://www.di-soric.com/210993

© di-soric . Right to change reserved