Inductive proximity switches

II5860

IIK2015BFRKG/US
Metal thread M30x1,5
Plug and socket

Increased sensing range
Optical setting aid (2 LED)

Sensing range 15mm [f]
flush mountable

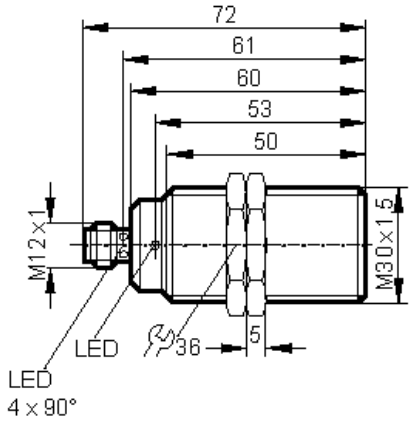

CE

Electrical design Output	2-wire DC PNP/NPN normally open / closed programmable
Operating voltage [V]	10 ... 36 DC
Current rating [mA]	100
Minimum load current [mA]	4
Short-circuit protection	•
Reverse polarity protection / Overload protection	•
Voltage drop [V]	< 4,6
Leakage current [mA]	< 1
Switching frequency [Hz]	200
Real sensing range [mm]	
Operating distance [mm]	0 ... 12,1
Switch-point drift [% / Sr]	
Hysteresis [% / Sr]	3 ... 20
Correction factors	mild steel = 1 / stainless steel approx. 0.7 / brass approx. 0.5 / Al approx. 0.5 / Cu approx. 0.4
Function display Switching status LED setting aid LED	 yellow (4x90°) red
Operating temperature [°C]	-25 ... +70
Protection	IP 67
EMC	EN 60947-5-2; EN 55011 class B
Housing material	special coated brass; CO-PC
Connection	M12 connector
Wiring	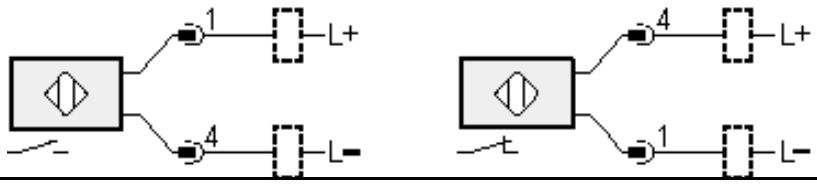

We reserve the right to make technical alterations without prior notice. — GB - II5860 — 06.07.1999