DIN Rail Mounted / Three Phase / (CT)SDM630MCT-TCP

Datasheet

- **Three phase 1/5A current transformer operated**
- **MID B+D certified**
- **Bi-directional measurement IMP & EXP**
- **Modbus TCP/IP Communication**
- **Multi-parameters measurement**
- **Plug-in solution**
- **LCD with white backlit, adjustable backlit time**



SDM630MCT-TCP is a new multi-function energy meter designed by EASTRON.
The meter can work with 1p2w, 3p3w, 3p4w electricity grid. It provides all important electrical parameters: voltage, current, power, PF, THD, frequency, demand, energy etc. In order to measure energy, the unit requires voltage and current inputs in addition to the supply required to power the product. The requisite current input(s) are obtained via current transformers(CT). Certified in the UK according to EU directive 2014/32/EU. MID certificate number 0120 / SGS0703.

The meter SDM630MCT-TCP is equipped with a Ethernet communication port and MODBUS-TCP protocol is adopted for remote reading and programming. The meter has a big back-lighted LCD showing data and uses 4 touch keypads in front for data checking and programming.

Specification Table

Specification	
Nominal voltage(Un)	3x230/400 V ac
Voltage range	100-276V L-N, Max. 276V / 172-480V L-L, Max. 480V
AC voltage withstand	4KV for 1 minute
Impulse voltage withstand	6KV-1.2μS
Rated current (Ib)	1A/5A CT
Operational current range	0.4% Ib-Imax
Over current withstand	20 Imax for 0.5s
Operational frequency range	50 or 60Hz
Power consumption per phase	≤ 2W/10VA
Display	LCD
Max reading	9999999.9 kWh/kVarh

Performance criteria	
Operating humidity	≤ 90%, no condensing
Storage humidity	≤ 95%, no condensing
Operating temperature	-40°C - +70°C
Storage temperature	-40°C - +80°C
Reference temperature	23°C± 2°C
International standard	IEC 62053-21 / EN50470-1/3
Accuracy class	Class1/Class B
Installation category	CAT III
Mechanical environment	M1
Electromagnetic environment	E2
Degree of pollution	2
Protection against penetration of dust and water	IP51(indoor)
Insulating encased meter of protective class	II
Electrostatic discharges	8kV contact / 15kV air gap
Radiated & conducted emissions	EN 55022

Accuracy	
Voltage,Current	0.5%
Frequency	0.2% of mid-frequency
Power factor	1% of unity (0.01)
Active power , Apparent power	±1% of range maximum
Reactive power	±1% of range maximum
Reactive energy(Varh)	Class 2
Active energy (Wh)	Class 1

Ethernet Communication	
Interface Standard and Protocol	Ethernet Modbus TCP
Communication Address	1~247
IP Address Assignment	DHCP Factory default address: 192.168.1.200
Data Type	Floating Point
Transmission Speed	> 100MB
Response Time	< 100mS

Sifam Tinsley Instrumentation Ltd
1 Warner Drive
Springwood Industrial Estate
Braintree, Essex CM7 2YW

Tel: +44 (0) 1376 335271
Email: sales@sifamtinsley.com
www.sifamtinsley.co.uk

DIN Rail Mounted / Three Phase / (CT)SDM630MCT-TCP

Datasheet

Wiring Configuration

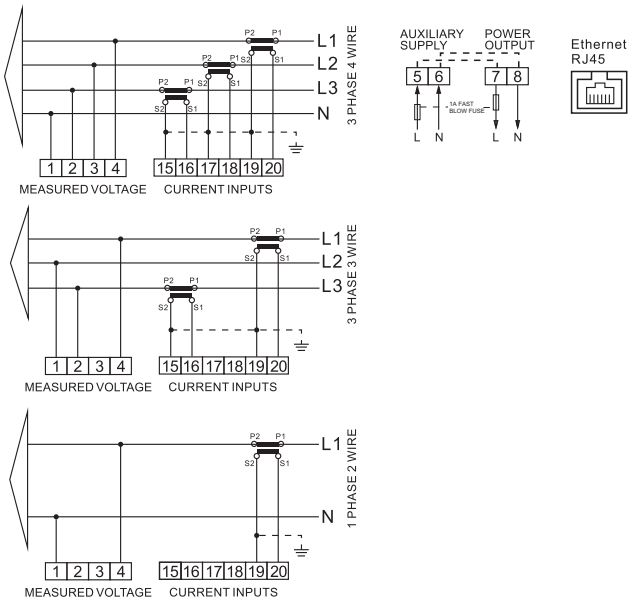

Dimension Drawing

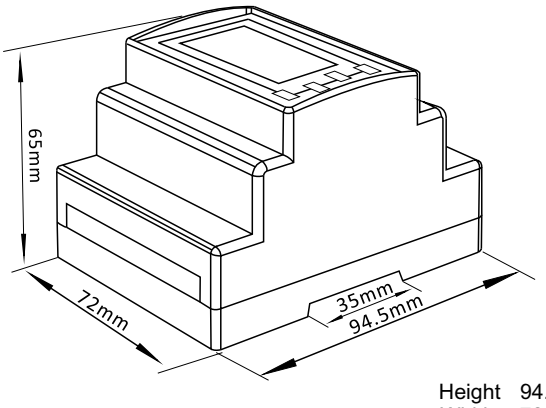

Height	94.5mm
Width	72mm
Depth	65mm

Ordering Options

Meter Type	Description of Meter
SDM630MCT-TCP	3PH-4W, 3PH-3W, 1PH-2W, 3x230(400)V, 1A or 5A CT input, Class 1.0, 50/60Hz, backlighted LCD display, Modbus-TCP output. Measures kWh, kVarh, W, Var, VA, V, A, PF, THD, Hz, Max.DMD, Imp_kWh, Exp_kWh etc.

Conformity References

Electromagnetic Compatibility: EN61326-1:2013 & EN61326-2-3:2013

Low Voltage Directive: EN 61010_1:2010+A1:2019 & EN 61010-2-30-2010

MID DIRECTIVE: 2014/32/EU

Sifam Tinsley Instrumentation Ltd
1 Warner Drive
Springwood Industrial Estate
Braintree, Essex CM7 2YW

Tel: +44 (0) 1376 335271
Email: sales@sifamtinsley.com
www.sifamtinsley.co.uk