

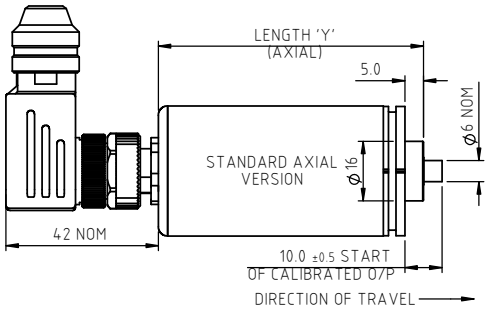

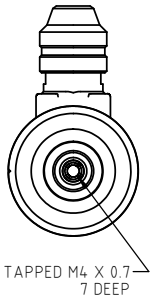

ELECTRICAL OPTIONS/ SPECIFICATIONS

OUTPUT	SUPPLY (NOM.)		
'A' 0.5 - 4.5V RATIOMETRIC	5V		
SUPPLY CURRENT 12mA TYP. 20mA MAX.			
CONNECTIONS;	CABLE 3-CORE	CABLE 5-CORE	CONNECTOR
+Ve	RED	RED	:1
+ SENSE (5-WIRE ONLY)	-	ORANGE	:1
0V	BLACK	BLACK	:3
- SENSE (5-WIRE ONLY)	-	GREY	:3
OUTPUT	WHITE	WHITE	:2
BODY	SCREEN	SCREEN	:4

CABLE: 0.2mm², O/A SCREEN,
PUR JACKET O/D; 3-CORE: Ø4mm, 5-CORE: Ø4.6mm,
SUPPLIED WITH 50cm OR REQUIRED LENGTH IN cm. e.g. 'L50/LQ50' (3/5-CORE)
CONNECTORS; MAXIMUM CONDUCTOR CROSS SECTION 0.75mm²

RANGE OF DISPLACEMENT FROM 0-2mm TO 0-50mm IN
INCREMENTS OF 1mm e.g.36.
BODY MATERIAL:- STAINLESS STEEL.
FLANGE BASE MATERIAL:- STAINLESS STEEL (CODE 'N')

FURTHER OPTIONS:
SINGLE PAIR OF BODY CLAMPS (CODE 'P')
SPRUNG PLUNGER, TO EXTENDED POSITION (CODE 'R')
DOME END (CODE 'T') IN CONJUNCTION WITH SPRUNG PLUNGER (CODE 'R')
PLUNGER FREE (CODE 'V') NOT AVAILABLE WITH SPRUNG OPTION
MAGNETIC TIP (CODE 'WA')

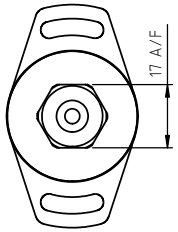

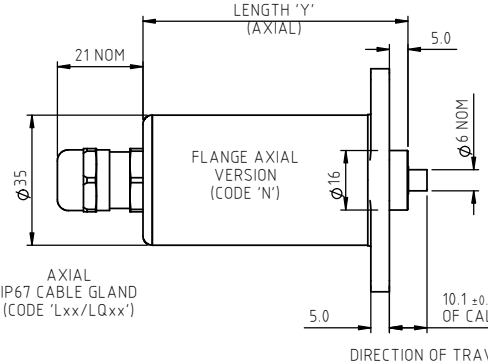

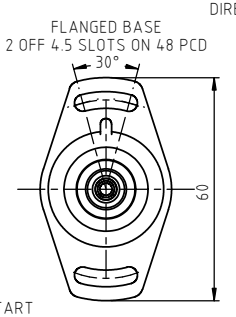

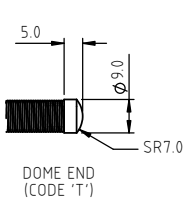

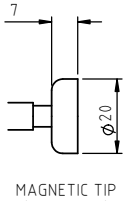

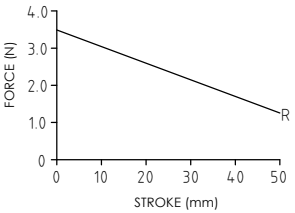

SPRING FORCE VS STROKE
(CODE 'R')

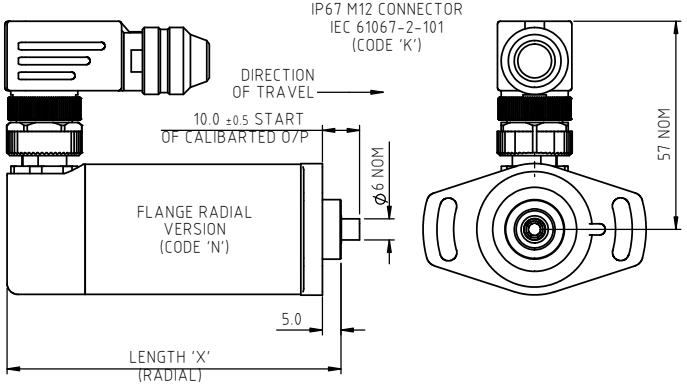

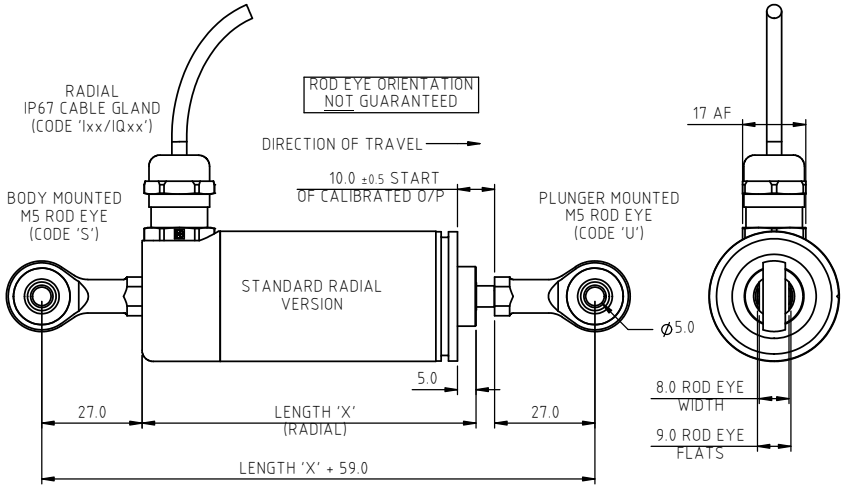

NOTE:- READ INSTALLATION SHEET E103-19
FOR FULL INSTRUCTIONS FOR USE.

ATEX / IECEx /UKEX APPROVED TO
Ex II 1GD
Ex ia IIC T4 Ga (Ta= -40° to +80°C)
Ex ia IIIC T135°C Da (Ta= -40° to +80°C)
Ui 11.4V, Ii 0.2A, Pi 0.51W

APPROVED FOR USE IN CONJUNCTION
WITH A GALVANICALLY ISOLATED BARRIER.

NOTE: APPROVAL ONLY APPLIES AT NORMAL
ATMOSPHERIC PRESSURE!

DRAWINGS NOT TO BE CHANGED WITHOUT REFERENCE TO THE CHANGE PROCEDURE.
CHANGES TO PARTS USED IN INTRINSICALLY SAFE PRODUCT MUST BE APPROVED BY THE AUTHORISED PERSON.
THIS IS AN UNCONTROLLED PRINT AND WILL NOT BE UPDATED.

REV	CHANGE HISTORY	DR'WN	DATE	CHK'D
N	MAG TIP & RADIAL END/ROD EYE RAN1311/1312	ASC	31/05/2023	ASC

NOTE: SENSORS WITH TRAVEL UP TO 50mm ARE MADE IN STANDARD LENGTHS

BODY LENGTH (mm)			
TRAVEL (mm)		'Y' AXIAL	'X' RADIAL
CALIBRATED	MECHANICAL		
0-2 TO 0-10	10	81.3	99.8
0-11 TO 0-20	20	91.3	109.8
0-21 TO 0-30	30	101.3	119.8
0-31 TO 0-50	50	121.3	139.8

THE PLUNGER RETRACTS 5mm FROM START OF CALIBRATED TRAVEL (2mm FOR SPRUNG VERSIONS) AND EXTENDS 9.5mm* BEYOND END OF MECHANICAL TRAVEL.
*DOES NOT INCLUDE DIFFERENCE BETWEEN CALIBRATED AND MECHANICAL TRAVEL.
DIMENSIONS ARE NOMINAL.
'V' CODED PLUNGER WILL DEPART SENSOR BODY.

Positek

APPROVED BY	REV		
RDM	N		X ±0.4 X.X ±0.2 X.XX ±0.1 DIMS mm

DESCRIPTION
E103 INTRINSICALLY SAFE
SHORT STROKE LINEAR SENSOR

SCALE	DRAWING NUMBER
3:4	E103-11
A3	SHEET 1 OF 1

E103 SHORT STROKE LINEAR POSITION SENSOR
INTRINSICALLY SAFE FOR HAZARDOUS DUST ATMOSPHERES

- **Intrinsically safe for Gas and Dust to: Ex II 1GD**
- **Non-contacting inductive technology to eliminate wear**
- **Travel set to customer's requirement**
- **Short body length**
- **Accurate, stable, durable and reliable**
- **Sealing to IP67**



As a leading designer and manufacturer of linear, rotary, tilt and intrinsically safe position sensors, Positek® has the expertise to supply a sensor to suit a wide variety of applications.
Our intrinsically safe E103 Linear Inductive Position Sensor incorporates electronics system EX07 which is ATEX / IECEx / UKEX approved for use in potentially explosive **gas/vapour and dust** atmospheres. The E103 is designed for a wide range of industrial applications and is ideal for OEMs seeking good sensor performance in situations where a short-bodied sensor is required for operation in hazardous areas. The unit is compact and space-efficient, being responsive along almost its entire length, and like all Positek® sensors provides a linear output proportional to travel. Each unit is supplied with the output calibrated to the travel required by the customer, from 2 to 50mm and with full EMC protection built in.
Overall performance, repeatability and stability are outstanding over a wide temperature range.
The sensor has a rugged stainless steel body and plunger. It is easy to install and set up, mounting options include; flange, M5 rod eye bearings and body clamps. The plunger can be supplied free or captive, with a female M4 thread, an M5 rod eye, magnetic tip, or spring-loaded with a dome end.
The E103 also offers a range of mechanical options, environmental sealing is to IP67.

SPECIFICATION

Dimensions		
Body diameter	35 mm	
Body Length Dependant on calibrated travel		
Calibrated Travel	Axial	Radial
2 mm to 10 mm	81.3 mm	99.8mm
11 mm to 20 mm	91.3 mm	109.8mm
21 mm to 30 mm	101.3 mm	119.8mm
31 mm to 50 mm	121.3 mm	139.8mm
Plunger	Ø 6mm	
For full mechanical details see drawing E103-11		
Independent Linearity	≤ ± 0.25% FSO @ 20°C	
Temperature Coefficients	< ± 0.01%/°C Gain & < ± 0.01%FS/°C Offset	
Frequency Response	> 10 kHz (-3dB)	
Resolution	Infinite	
Noise	< 0.02% FSO	
Intrinsic Safety	Ex II 1GD Ex ia IIC T4 Ga (Ta= -40°C to 80°C) Ex ia IIIC T135°C Da (Ta= -40°C to 80°C)	
Approval only applies to the specified ambient temperature range and atmospheric conditions in the range 0.80 to 1.10 Bar, oxygen ≤ 21%		
Sensor Input Parameters	Ui: 11.4V, Ii: 0.20A, Pi: 0.51W.	
(connector option/s)	Ci: 1.16µF, Li: 50µH	
(cable option/s)	Ci: 1.36µF, Li: 860µH with 1km max. cable	
Environmental Temperature Limits		
Operating	-40°C to +80°C	
Storage	-40°C to +125°C	
Sealing	IP67	
EMC Performance	EN 61000-6-2, EN 61000-6-3	
Vibration	IEC 68-2-6: 10 g	
Shock	IEC 68-2-29: 40 g	
MTBF	350,000 hrs 40°C Gf	
Drawing List		
E103-11	Sensor Outline	

3D models, step or .igs format, available on request.

Do you need a position sensor made to order to suit a particular installation requirement or specification? We'll be happy to modify any of our designs to suit your needs - please contact us with your requirements.

For further information please contact:
www.positek.com sales@positek.com
Tel: +44(0)1242 820027 fax: +44(0)1242 820615
Positek, Andoversford Industrial Estate, Cheltenham GL54 4LB. U.K.

E103 SHORT STROKE LINEAR POSITION SENSOR
INTRINSICALLY SAFE FOR HAZARDOUS DUST ATMOSPHERES

Intrinsically safe equipment is defined as *"equipment which is incapable of releasing sufficient electrical or thermal energy under normal or abnormal conditions to cause ignition of a specific hazardous atmosphere mixture in its most easily ignited concentration."*

ATEX / IECEx / UKEX approved to;

Ex II 1GD
Ex ia IIC T4 Ga (Ta= -40°C to 80°C)
Ex ia IIIC T135°C Da (Ta= -40°C to 80°C)

Designates the sensor as belonging to; Group II: suitable for all areas **except mining**, Category 1 GD: can be used in areas with continuous, long or frequent periods of exposure to hazardous gas / vapour (Zones 2 to 0) and dust (Zone 20).

Gas / Vapour:

Protection class ia, denotes intrinsically safe for all zones

Apparatus group IIC: suitable for IIA, IIB and IIC explosive gas / vapour.

Temperature class T4: maximum sensor surface temperature under fault conditions 135°C.

Dust:

T135°C: maximum sensor surface temperature under fault conditions.

Ambient temperature range extended to -40°C to +80°C.

It is imperative Positek® intrinsically safe sensors be used in conjunction with a galvanic barrier to meet the requirements of the product certification. The Positek X005 Galvanic Isolation Amplifier is purpose made for Positek IS sensors making it the perfect choice. Refer to the X005 datasheet for product specification and output configuration options.

For cable lengths exceeding 10 metres a five wire connection is recommended to eliminate errors introduced by cable resistance and associated temperature coefficients.

ATEX / IECEx / UKEX approved sensors suitable for gas (X series) and mining (M series) applications, are also available from Positek.

E103 .	a	b	c	d	e	f	g	h	j	k
	Displacement	A	Y	Connections	Option	Option	Option	Option	Option	Z000

a **Displacement**	**Value**
Factory set to any length from 0-2 mm to 0-50 mm (e.g. 0-36 mm)	**36**

b **Output**

Supply V_{dc} (tolerance)	**Output**	**Code**
+5V (4.5 - 5.5V)	0.5 - 4.5V (ratiometric with supply)	**A**

Supply Current 10mA typical, 12mA max.

c **Calibration Adjustments**	**Code**
Sealed	**Y**

d **Connections**	**Code**
Cable gland radial IP67 Pg9, metal, 3-core cable	**Ixx**
Cable gland radial IP67 Pg9, metal, 5-core cable	**IQxx**
Connector axial IP67 4 pin M12 IEC 61076-2-101, metal	**J**
Connector axial IP67 4 pin M12 IEC 61076-2-101, metal, pre-wired 3-core cable	**Jxx**
Connector axial IP67 4 pin M12 IEC 61076-2-101, metal, pre-wired 5-core cable	**JQxx**
Connector radial IP67 4 pin M12 IEC 61076-2-101, metal	**K**
Connector radial IP67 4 pin M12 IEC 61076-2-101, metal, pre-wired 3-core cable	**Kxx**
Connector radial IP67 4 pin M12 IEC 61076-2-101, metal, pre-wired 5-core cable	**KQxx**
Cable gland axial IP67 Pg9, metal, 3-core cable	**Lxx**
Cable gland axial IP67 Pg9, metal, 5-core cable	**LQxx**
Cable gland, short† axial IP67, metal, 3-core cable	**Mxx**
Cable gland, short† axial IP67, metal, 5-core cable	**MQxx**

Specify required cable length **'xx'** in cm. e.g. L2000 specifies axial cable gland with 20 m of cable, 50 cm supplied as standard. **Note!** maximum length supplied 15000cm. †Nb: restricted cable pull strength.

e **Housing**	**Code**
Standard default	blank
Flange Mount 2 off 4.5 mm x 30 degree wide slots, 48 mm P.C.D.	**N**
M5 Rod-eye bearing radial version only	**S**

f **Body Fittings**	**Code**
None default	blank
Body Clamps 1 pair	**P**

g **Sprung Plunger**	**Code**
Not sprung default	blank
Spring extend captive plunger only. Note! Supplied loose without option 'T'	**R**

h **Plunger Fittings**	**Code**
Female thread M4x0.7x7 deep default	blank
Dome end with spring extend option 'R'	**T**
M5 Rod-eye Bearing	**U**
Magnetic Tip	**WA**

j **Plunger**	**Code**
Captive plunger is retained - default	blank
Non-captive plunger can depart body	**V**

k **Z-code**	**Code**
Calibration to suit X005 required	**Z000**
≤± 0.1% FSO @20°C Independent Linearity 0 - 10 mm min.	**Z650**
¼" Rod eyes with options 'S' and/or 'U'	**Z827**

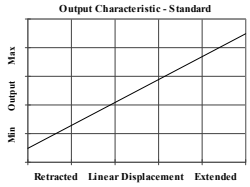

For further information please contact:
www.positek.com sales@positek.com
Tel: +44(0)1242 820027 fax: +44(0)1242 820615
Positek, Andoversford Industrial Estate, Cheltenham GL54 4LB. U.K.

Three or Five-Wire Mode Connection

FOR INTRINSICALLY SAFE SENSORS IN HAZARDOUS ATMOSPHERES

The aim of this document is to help readers who do not understand what is meant by three or five wire modes of connection between the galvanic isolation amplifier and sensor, and the factors behind them. It is by no means an in-depth technical analysis of the subject.

Whether opting for a pre-wired Positek® Intrinsically Safe sensor or one with a connector, choosing the right mode of connection and cable to suit the application requires careful consideration.

Interconnecting cables are not perfect conductors and offer resistance to current flow, the magnitude of resistance† depends on conductors resistivity, which changes with temperature, cross sectional area‡ and length. If the voltage were to be measured at both ends of a length of wire it would be found they are different, this is known as volts drop. Volts drop changes with current flow and can be calculated using Ohm's law, it should be noted that volts drop occurs in both positive and negative conductors. The effects of volts drop can be reduced by increasing the conductors cross sectional area, this does not however eliminate the effects due to temperature variation. There are instances where large cross-section cables are not practical; for example most standard industrial connectors of the type used for sensors have a maximum conductor capacity of 0.75mm², copper prices and ease of installation are other considerations.

This is important because the effects of volts drop can significantly alter the perceived accuracy of the sensor which is ratiometric i.e. the output signal is directly affected by the voltage across the sensor. Changes in temperature will also be seen as gain variation in the sensor output.

Three wire mode connections are common and are suitable in most cases with short or moderate cable runs. Applications that do not require a high degree of accuracy but have cable runs, say in excess of 10m, volts drop can reduced by introducing a terminal box close to the sensor and using a larger cross-section cable for a majority of the cable run. Sensors supplied with three core cable are calibrated with the cable fitted which largely eliminates errors due to conductor resistance at room temperature however, as mentioned above, small gain errors due to temperature fluctuations should be expected.

Five wire mode connections have significant benefits as losses in the positive and negative conductors are compensated for by the galvanic isolation amplifier which can 'sense' the voltage across the sensor and dynamically adjust the output voltage so that the voltage across the sensor is correct. The effects of cable resistance and associated temperature coefficients are eliminated allowing for smaller conductors than a three wire connection for the same cable run. The amplifier can compensate for up to 15Ω per conductor with a current flow of 15mA, which is more than adequate for 150m of 0.25 mm² cable, longer lengths will require larger conductors.

For this reason Positek® recommends five wire connections for cable lengths exceeding 10 metres in 0.25 mm² cable to preserve the full accuracy of the sensor.

See illustrations below for examples of connecting a sensor to the galvanic isolation amplifier.

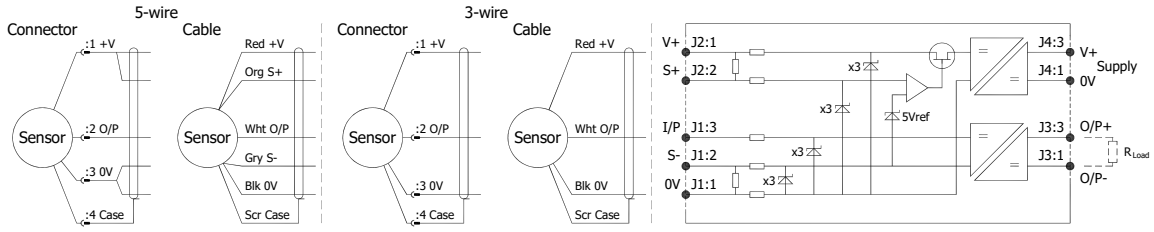

Cable Length (metres)	Up to 150	150 - 300	300 - 450	450 - 600	600 - 900	900 - 1000
Cross Section (mm²)	0.25	0.5	0.75	1.0	1.5	2.0

The table above shows recommended conductor sizes with respect to cable length for both three and five wire connections, based on copper conductors. Three wire connections will introduce a gain reduction of 5% and a ±1% temperature dependence of gain over the range -40°C to +80°C for the cable temperature. (i.e. about –150 ppm/°C for the maximum lengths shown and less pro rata for shorter lengths.)

It should be noted that the maximum cable length, as specified in the sensor certification, takes **precedence** and **must not** be exceeded.

Positek® sensors are supplied with three core 0.25 mm² cable as standard, however five core 0.25 mm² cable can be supplied on request. The galvanic isolation amplifier is available as;

G005-*** for 'G' and 'H' prefix sensors
X005-*** for 'E', 'M' and 'X' prefix sensors

† R = ρL/A ρ is the resistivity of the conductor (Ωm) L is the length of conductor (m) A is the conductor cross-sectional area (m²).
‡ It is presumed that **d**irect **c**urrent flow is uniform across the cross-section of the wire, the galvanic isolation amplifier and sensor are a dc system.

For further information please contact:
www.positek.com sales@positek.com
Tel: +44(0)1242 820027 fax: +44(0)1242 820615
Positek, Andoversford Industrial Estate, Cheltenham GL54 4LB. U.K.

Installation Information
E103 SHORT STROKE LINEAR POSITION SENSOR
INTRINSICALLY SAFE FOR HAZARDOUS DUST ATMOSPHERES

For certificate number and safety parameters information for product marked EX04, see next page.

ATEX / IECEx / UKEX Qualified to Intrinsic Safety Standard Certificate numbers SIRA 13ATEX2371X IECEx SIR 13.0154X CSAE 21UKEX2537X			Ex II 1GD Ex ia IIC T4 Ga (Ta = -40°C to +80°C) Ex ia IIIC T135°C Da (Ta = -40°C to +80°C)
Electronics Version	**Output Description:**	**Supply Voltage:** V_s (tolerance)	**Load resistance:**
EX07	0.5 - 4.5V (ratiometric with supply) [Output code 'A']	+5V (4.5 - 5.5V)	5kΩ min

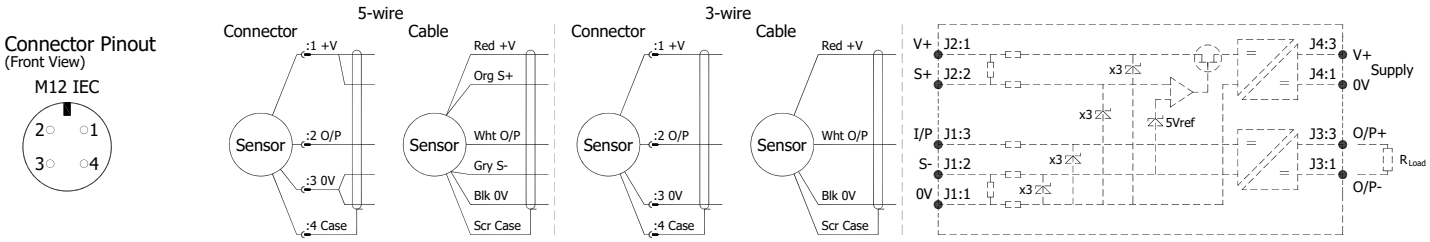

Putting Into Service: The sensor must be used with a galvanic isolation barrier designed to supply the sensor with a nominal 5V and to transmit the sensor output to a safe area. The barrier parameters must not exceed:-

Ui = 11.4V	**Ii = 0.20A**	**Pi = 0.51W**
Ci = 1.36µF*	**Li = 860µH***	(with maximum cable length)
Ci = 1.16µF	**Li = 50µH**	(without cable)

*Figures for 1km cable where: Ci = 200pF/m & Li = 810nH/m

The sensor is certified to be used with up to **1000m** of cable, cable characteristics must not exceed:-

Capacitance:	≤ 200 pF/m	or max. total of:	200 nF
Inductance:	≤ 810 nH/m	or max. total of:	810 µH

Approval only applies to specified ambient temperature range and atmospheric conditions in the range: 0.80 to 1.10 Bar, oxygen ≤ 21%.

The performance of the sensor may be affected by voltage drops associated with long cable lengths; For cable lengths exceeding 10 metres a five wire connection is recommended to eliminate errors introduced by cable resistance and associated temperature coefficients.

Warning - The M12 IEC connector may be rotated for purposes of convenient orientation of the connector and cable, however rotating the connector more than one complete revolution is not recommended. **Repeated rotation of the connector will damage the internal wiring!**

Special Condition for Safe Use:

The apparatus does not meet the 500 V r.m.s dielectric strength test between circuit and frame, in accordance with clause 6.3.13 of IEC 60079-11:2011. This must be taken into consideration on installation.

When using a Sensor that has an integral cable in a dust application, the free end of the cable shall be appropriately terminated for the zone of use.

Under certain extreme circumstances, the non-metallic and isolated metal parts incorporated in the enclosure of this equipment may generate an ignition-capable level of electrostatic charge. Therefore the equipment shall not be installed in a location where the external conditions are conducive to the build-up of electrostatic charge on such surfaces. This is particularly important if the equipment is installed in a zone 0 location. In addition, the equipment shall only be cleaned with a damp cloth.

Use: The sensor is designed to measure linear displacement and provide an analogue output signal.

Assembly and Dismantling: The unit is not to be serviced or dismantled and re-assembled by the user.

Maintenance: No maintenance is required.

Mechanical Mounting: Depending on options, body can be mounted by flange, rod eye bearing or clamping the sensor body - body clamps are available, if not already ordered. Plunger mounted by M4x0.7 female thread, rod-eye bearing or magnetic tip - see drawing E103-11.

Output Characteristic: Plunger extended by, at start of normal travel:
Standard: 10 mm* from Ø35 mm face
Flange Mount: 10 mm* from flange face
*Note: where dome end option is fitted add 5 mm.
The output increases as the plunger extends from the sensor body, the calibrated stroke is between 2 mm and 50 mm.

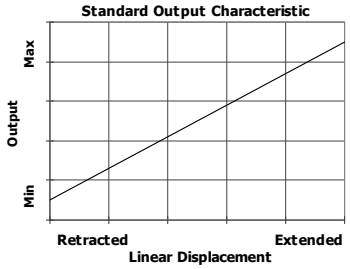

Incorrect Connection Protection levels: Not protected – the sensor is **not** protected against either reverse polarity or over-voltage. The risk of damage should be minimal where the supply current is limited to less than 50mA.

For further information please contact:
www.positek.com sales@positek.com
Tel: +44(0)1242 820027 fax: +44(0)1242 820615
Positek, Andoversford Industrial Estate, Cheltenham GL54 4LB. U.K.

Installation Information
E103 SHORT STROKE LINEAR POSITION SENSOR
INTRINSICALLY SAFE FOR HAZARDOUS DUST ATMOSPHERES

For certificate number and safety parameters information for product marked EX07, see previous page.

ATEX Qualified to Intrinsic Safety Standard Certificate numbers SIRA 00ATEX2076X			Ex II 1GD EEx ia I/IIC T4 (Ta = -40°C to +80°C) Ex ia D 20 T135°C (Ta = -40°C to +80°C)
Electronics Version	**Output Description:**	**Supply Voltage:** V_s (tolerance)	**Load resistance:**
EX04	0.5 - 4.5V (ratiometric with supply) [Output code 'A']	+5V (4.5 - 5.5V)	5kΩ min

The barrier parameters must not exceed:-

Ui = 11.4V **Ii = 0.20A** **Pi = 0.51W**
Ci = 1.36µF* **Li = 710µH*** ('Lxx' option) *Figures for 1km cable
Ci = 1.16µF **Li = 50µH** ('J' option)

The sensor is certified to be used with up to **1000m** of cable, cable characteristics must not exceed:-

Capacitance: ≤ 200 pF/m for max. total of: 200 nF
Inductance: ≤ 660 nH/m for max. total of: 660 µH

With the exception of the certificate number and safety parameters above, all other notes regarding Putting Into Service, Use, Assembly and Dismantling etc. on previous page apply to sensors marked EX04 or EX07.

For further information please contact:
www.positek.com sales@positek.com
Tel: +44(0)1242 820027 fax: +44(0)1242 820615
Positek, Andoversford Industrial Estate, Cheltenham GL54 4LB. U.K.