N0533A

Switching amplifiers for Namur sensors

NV1221/24VDC/RL/1D/1G

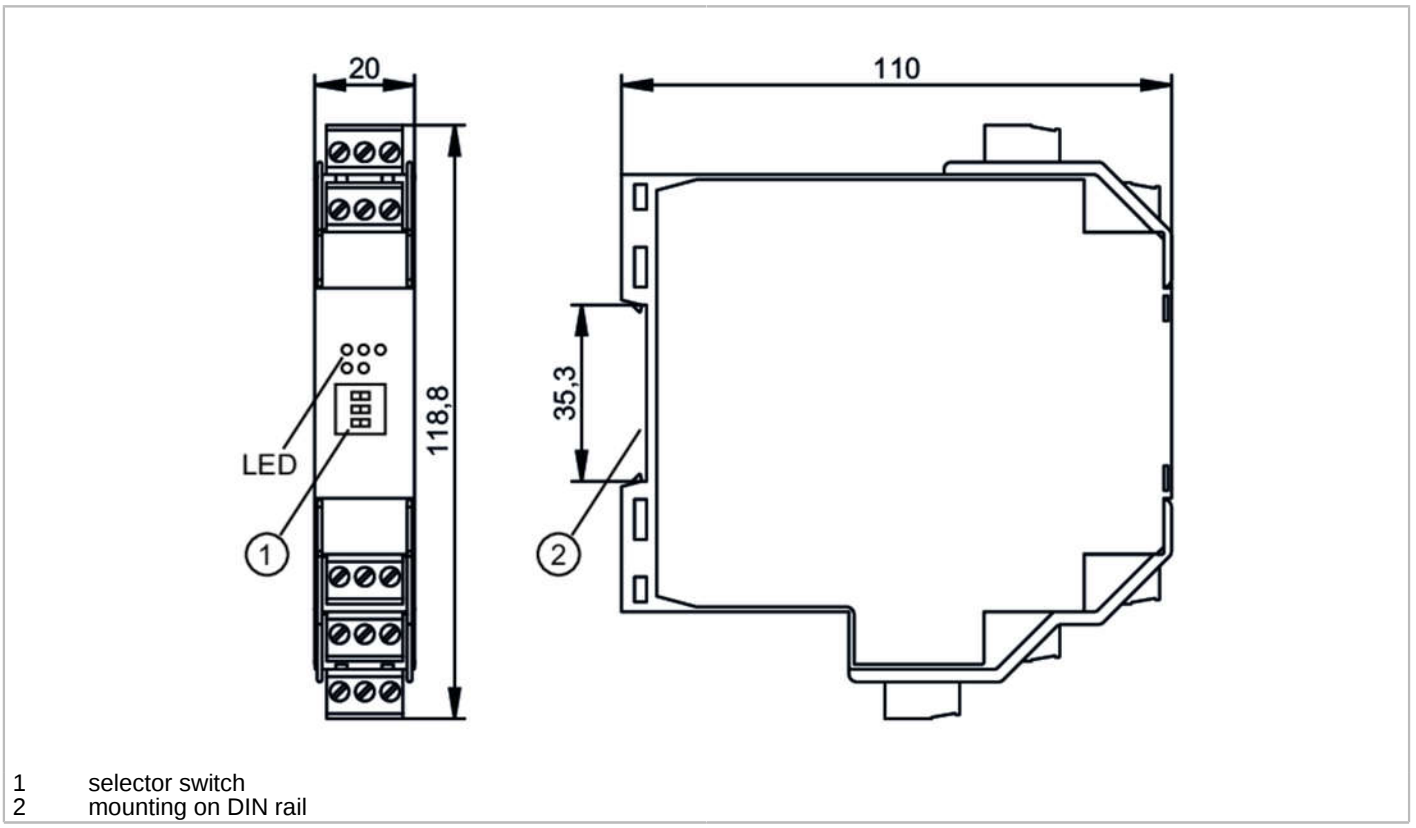

1 selector switch
2 mounting on DIN rail

Application		
Application		short-circuit monitoring; Wire monitoring
Electrical data		
Operating voltage tolerance	[%]	-15...25
Operating voltage	[V]	24 DC
Current consumption	[mA]	< 50
Number of channels		2
Outputs		
Electrical design		relay; (per channel: 1 changeover contact parameterisable)
Contact rating		253 V AC / 2 A / cos phi > 0,7 // 40 V DC / 2 A; (ohmic resistance)
Switching frequency DC	[Hz]	10
Operating conditions		
Ambient temperature	[°C]	-20...60
Protection		IP 20
Tests / approvals		
Approval		PTB 02 ATEX 2036; IECEx PTB 17.0024
ATEX marking		Ex II (1) G [Ex ia Ga] IIC
		Ex II (1) D [Ex ia Da] IIIC
EMC	EN 50081-2	(1993)
	EN 61326-1	(2006)
MTTF	[years]	326

N0533A

Switching amplifiers for Namur sensors

NV1221/24VDC/RL/1D/1G

Mechanical data			
Weight	[g]	188.45	
Switching cycles mechanical		10 million	
Displays / operating elements			
Display		switching status	2 x LED, yellow
		operation	LED, green
		function	2 x LED, red
Remarks			
Remarks		Caution The control monitor must be mounted outside the hazardous area.	
		Free terminals must not be used.	
Pack quantity		1 pcs.	

N0533A

Switching amplifiers for Namur sensors

NV1221/24VDC/RL/1D/1G

Electrical connection

terminals: ...2.5 mm²

Connection

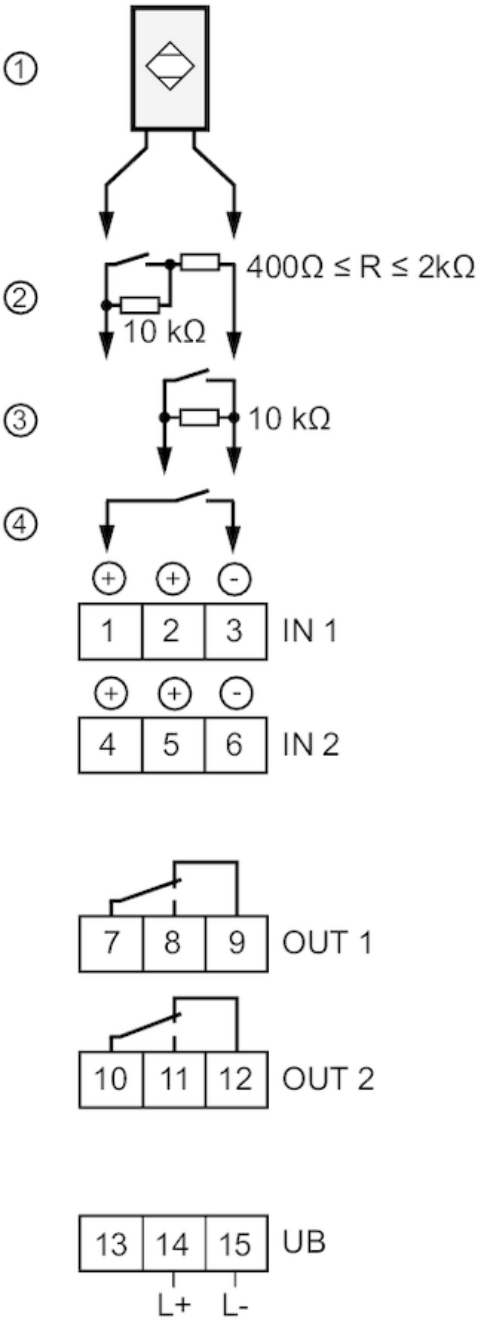

N0533A

Switching amplifiers for Namur sensors

NV1221/24VDC/RL/1D/1G

Other data

Maximum values for control circuit

in protection rating intrinsic safety	[EEx ia] IIC	[EEx ia] IIB	[EEx ib] IIC	[EEx ib] IIB
Voltage [V]	10.5	10.5	10.5	10.5
Current [mA]	13	13	13	13
Power [mW]	34	34	34	34
External inductance [mH]	210	840	210	840
External capacitance [µF]	2.41	16.8	2.41	16.8