W4D350-CA06-14

AC axial fan

straight blades (A series)

Fan housing with guard grille

ebm-papst Mulfingen GmbH & Co. KG
Bachmühle 2 · D-74673 Mulfingen
Phone +49 7938 81-0
Fax +49 7938 81-110
info1@de.ebmpapst.com
www.ebmpapst.com

Limited partnership · Headquarters Mulfingen
Amtsgericht (court of registration) Stuttgart · HRA 590344

General partner Elektrobau Mulfingen GmbH · Headquarters Mulfingen
Amtsgericht (court of registration) Stuttgart · HRB 590142

Nominal data

Type	**W4D350-CA06-14**
Motor	**M4D068-EC**

Phase		3~	3~	3~	3~
Nominal voltage	VAC	230	230	400	400
Wiring		Δ	Δ	Y	Y
Frequency	Hz	50	60	50	60
Method of obtaining data		fa	fa	fa	fa
Valid for approval/standard		-	-	-	-
Speed (rpm)	min^{-1}	1420	1620	1420	1620
Power consumption	W	145	190	145	190
Current draw	A	0.68	0.62	0.39	0.36
Max. back pressure	Pa	150	150	150	150
Max. back pressure	in. wg	0.6	0.6	0.6	0.6
Min. ambient temperature	°C	-25	-25	-25	-25
Max. ambient temperature	°C	50	50	50	50

ml = Max. load · me = Max. efficiency · fa = Free air · cs = Customer specification · ce = Customer equipment
Subject to change

Data according to Commission Regulation (EU) 327/2011 (EN 17166)

		Actual	Req. 2015
01 Overall efficiency η_{es}	%	29.5	28.6
02 Measurement category		A	
03 Efficiency category		Static	
04 Efficiency grade N		40.9	40
05 Variable speed drive		No	

09 Power consumption P_e	kW	0.15
09 Air flow q_v	m^3/h	2100
09 Pressure increase p_{fs}	Pa	80
10 Speed (rpm) n	min^{-1}	1395
11 Specific ratio*		1.00

Data obtained at optimum efficiency level.
The ErP data is determined using a motor-impeller combination in a standardized measurement setup.

* Specific ratio = 1 + p_{fs} / 100 000 Pa

LU-200069

AC axial fan

straight blades (A series)

Fan housing with guard grille

Technical description

Weight	5.9 kg
Size	350 mm
Motor size	68
Rotor surface	Painted black
Blade material	Sheet steel, painted black
Fan housing material	Sheet steel, pre-galvanized and coated with black plastic (RAL 9005)
Guard grille material	Steel, coated with black plastic (RAL 9005)
Number of blades	5
Airflow direction	V
Direction of rotation	Counterclockwise, viewed toward rotor
Degree of protection	IP44; installation- and position-dependent as per EN 60034-1
Insulation class	"B"
Moisture (F) / Environmental (H) protection class	H1
Max. permitted ambient temp. for motor (transport/storage)	+ 80 °C
Min. permitted ambient temp. for motor (transport/storage)	- 40 °C
Installation position	Shaft horizontal or rotor on bottom; rotor on top on request
Condensation drainage holes	On rotor side
Mode	S1
Motor bearing	Ball bearing
Touch current according to IEC 60990 (measuring circuit Fig. 4, TN system)	< 0.75 mA
Motor protection	Thermal overload protector (TOP) with basic insulation
With cable	Lateral
Protection class	I (with customer connection of protective earth)
Conformity with standards	EN 60335-1; CE
Approval	UL 1004-1

ebm-papst Mulfingen GmbH & Co. KG · Bachmühle 2 · D-74673 Mulfingen · Phone +49 (0) 7938 81-0 · Fax +49 (0) 7938 81-110 · info1@de.ebmpapst.com · www.ebmpapst.com

AC axial fan

straight blades (A series)

Fan housing with guard grille

Product drawing

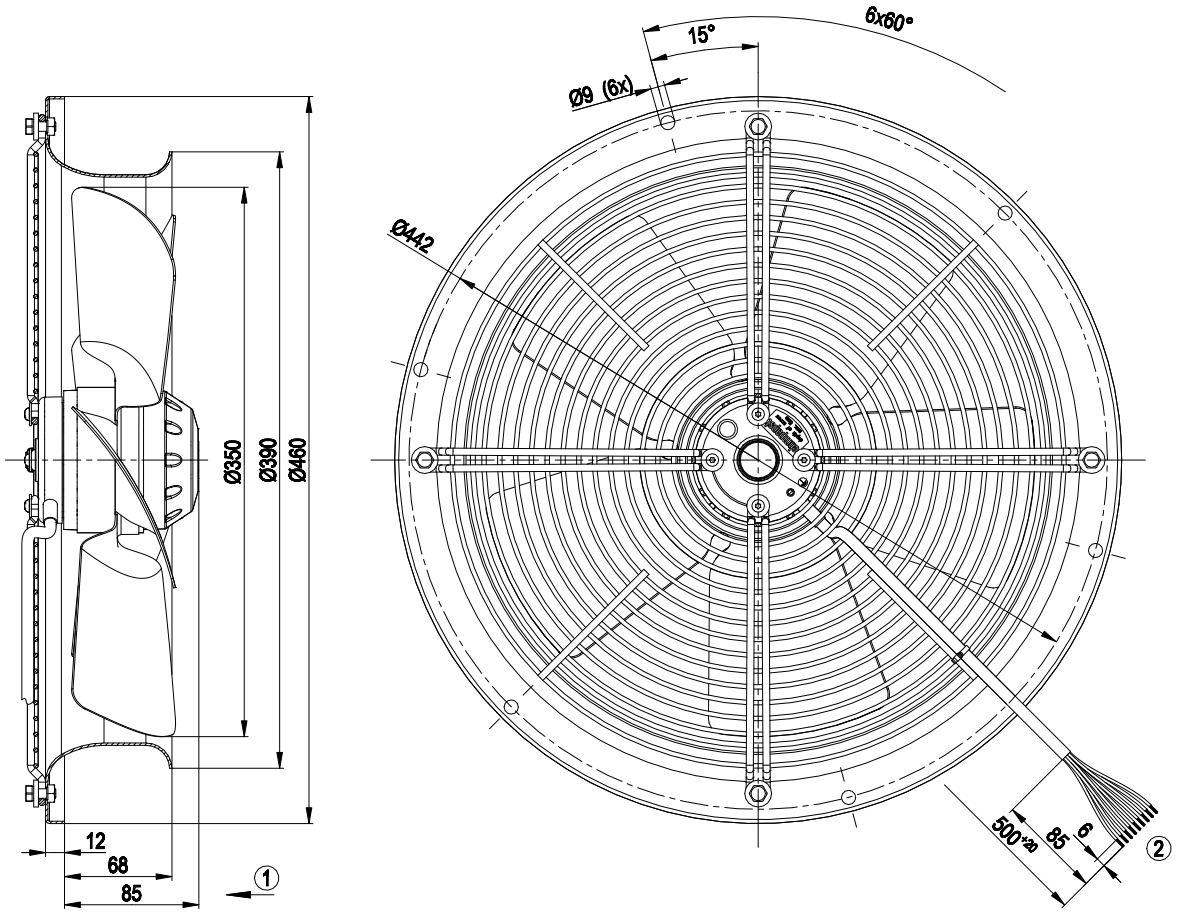

1	Direction of air flow "V"
2	Cable AWG 20, 9x crimped splices

ebm-papst Mulfingen GmbH & Co. KG · Bachmühle 2 · D-74673 Mulfingen · Phone +49 (0) 7938 81-0 · Fax +49 (0) 7938 81-110 · info1@de.ebmpapst.com · www.ebmpapst.com

AC axial fan

straight blades (A series)

Fan housing with guard grille

Connection diagram

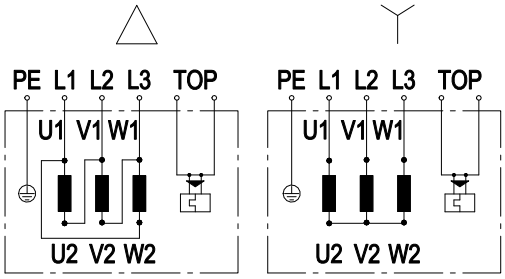

	Three-phase motor
Y	Star connection
Δ	Delta connection
L1	= U1 = black 1
L2	= V1 = black 2
L3	= W1 = black 3
V2	= black 4
U2	= black 5
W2	= black 6
TOP	(thermal overload protector) 2x gray
PE	green/yellow

ebm-papst Mulfingen GmbH & Co. KG · Bachmühle 2 · D-74673 Mulfingen · Phone +49 (0) 7938 81-0 · Fax +49 (0) 7938 81-110 · info1@de.ebmpapst.com · www.ebmpapst.com

AC axial fan

straight blades (A series)

Fan housing with guard grille

Curves: Air performance 50 Hz

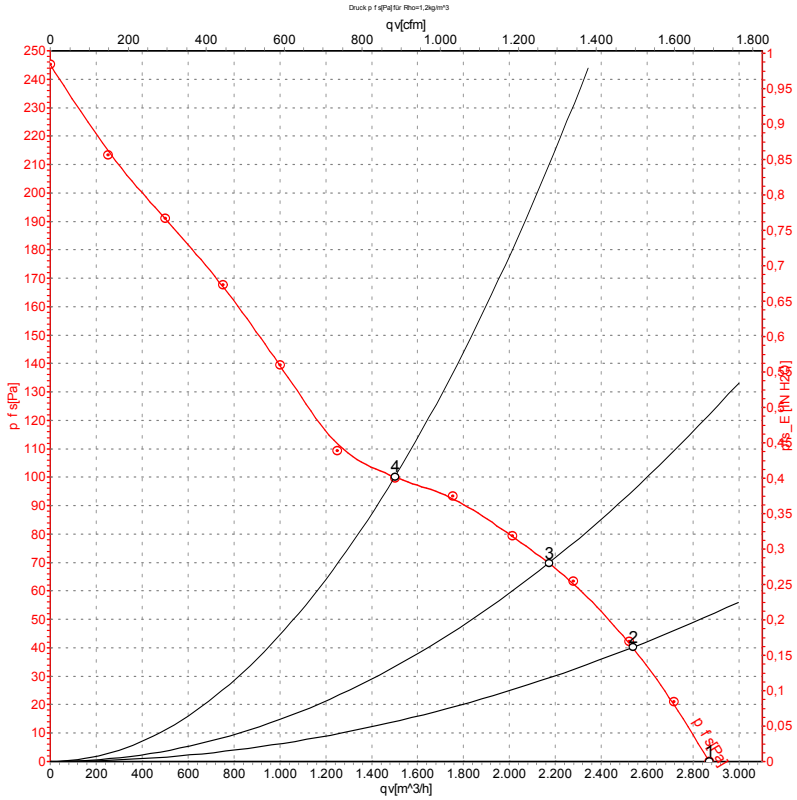

Measurement: LU-64797-1

Air performance measured according to ISO 5801 installation category A. For detailed information on the measurement setup, contact ebm-papst. Intake sound level: Sound power level according to ISO 13347 / sound pressure level measured at 1 m distance from fan axis. The values given are valid under the specified measuring conditions and may vary due to conditions of installation. For deviations from the standard configuration, the parameters have to be checked on the installed unit.

Measured values

	U	f	n	P_e	I	q_V	p_{fs}	q_V	p_{fs}
	V	Hz	min^{-1}	W	A	m^3/h	Pa	cfm	in. wg
1	400	50	1420	128	0.39	2870	0	1690	0.00
2	400	50	1405	141	0.40	2535	40	1495	0.16
3	400	50	1395	150	0.41	2170	70	1280	0.28
4	400	50	1385	158	0.41	1500	100	885	0.40

U = Voltage · f = Frequency · n = Speed (rpm) · P_e = Power consumption · I = Current draw · q_V = Air flow · p_{fs} = Pressure increase

ebm-papst Mulfingen GmbH & Co. KG · Bachmühle 2 · D-74673 Mulfingen · Phone +49 (0) 7938 81-0 · Fax +49 (0) 7938 81-110 · info1@de.ebmpapst.com · www.ebmpapst.com

AC axial fan

straight blades (A series)

Fan housing with guard grille

Curves: Air performance 60 Hz

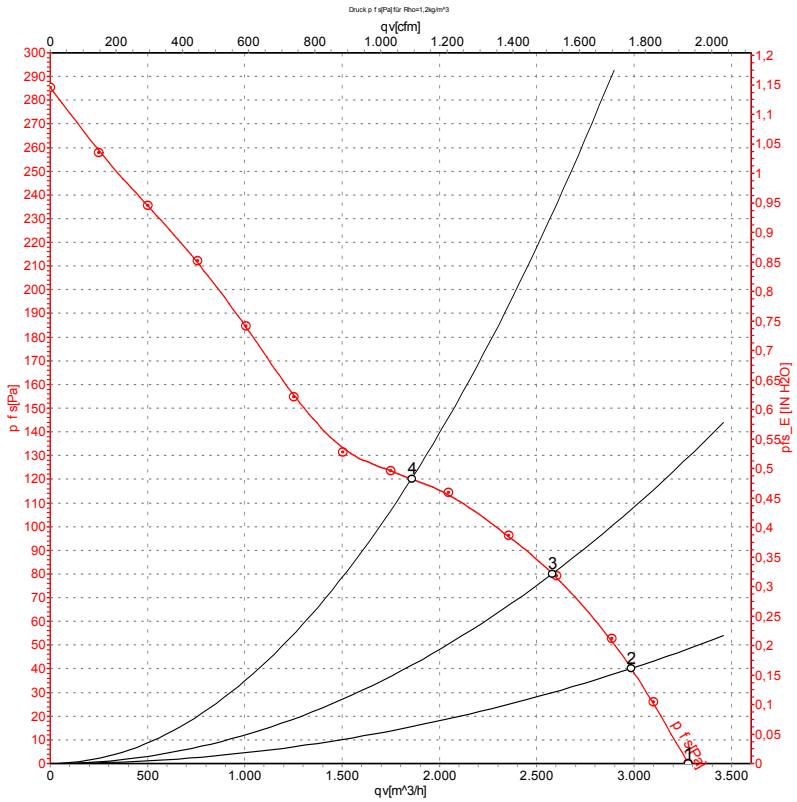

Measurement: LU-64798-1

Air performance measured according to ISO 5801 installation category A. For detailed information on the measurement setup, contact ebm-papst. Intake sound level: Sound power level according to ISO 13347 / sound pressure level measured at 1 m distance from fan axis. The values given are valid under the specified measuring conditions and may vary due to conditions of installation. For deviations from the standard configuration, the parameters have to be checked on the installed unit.

Measured values

	U	f	n	P_e	I	q_V	p_{fs}	q_V	p_{fs}
	V	Hz	min^{-1}	W	A	m^3/h	Pa	cfm	in. wg
1	400	60	1620	169	0.36	3280	0	1930	0.00
2	400	60	1605	185	0.36	2985	40	1755	0.16
3	400	60	1580	202	0.38	2580	80	1520	0.32
4	400	60	1560	217	0.39	1855	120	1090	0.48

U = Voltage · f = Frequency · n = Speed (rpm) · P_e = Power consumption · I = Current draw · q_V = Air flow · p_{fs} = Pressure increase

ebm-papst Mulfingen GmbH & Co. KG · Bachmühle 2 · D-74673 Mulfingen · Phone +49 (0) 7938 81-0 · Fax +49 (0) 7938 81-110 · info1@de.ebmpapst.com · www.ebmpapst.com