REDUBAR

Pressure reducing valve

Tecnical Data Sheet



wattswater.eu

WATTS®

Description

REDUBAR is an ideal pressure reducing valve to protect hot water storage heaters, household appliances, drinks vending machine, water cooler.

- Compact : it takes up less space, easier to fit, it is at present the more unobtrusive underneath hot water storage heaters.
- Ready to install : Factory preset, you can change the setting from 1.5 to 5 bar.
- Tried and tested raliability : on the market for over 20 years, the REDUBAR is made in Somme in France in our production unit ISO9001 certified by BVQI.
- Any positions : The REDUBAR can be fitted in any position
- Robust : Once fitted, it doesn't require any special maintenance.
- Silent : The valve system design and types of seals used ensure operation with no vibrationi and no banging about.
- Specific flow: flow is appropriate to isolated appliances like washing machines or hot water storage heaters. It has a part in better thermostatic mixer control and controlled water consumption.



REDUBAR

Pressure reducing valve

DN	Connection	PFA in bar	PS in bar	Ref.	Weight Kg
"			L1		
3/4*	Male / Female free nut	15	15	**2282500**	0,186
3/4, 1/2	Multi-threaded Male, Female connections at upstream and downstream	15	15	**2282501**	0,133

*Specifically for safety groups

Important notice :

The temperature and pressure indications given are under no circumstances a guarantee that they are suitable for your system. Therefore, it is essential to validate the use of the products under given operating conditions with our technical department.

Technical features	
Operating temperature	Continuous: : 30 °C / Maxi. : 70°C*
Permissible operating pressure (PFA) in water	15 bar
Setting range	1.5 to 4 bar. Factory preset (4 bar at zero discharge for 3 bar working)
Mediums	Drinking water

*Risk of scaling if used In permanent service above 30°C

Nomenclature and materials

N°	Description	Materials	EURO
1	Body	Brass	CW602N
2	Spring	Pre-zing plated steel	White zinc plated
3	Jacket	PA	PA66
4	Piston	PA	PA66
5	Machined body M-free nut	Brass	CW602N
6	Screw	Stainless steel	
7	Cupel	Brass	CW617N4MS
8	Cupel seal	EPDM	EPDM
9	O-ring	EPDM	EPDM
10	O-ring	EPDM	EPDM
11	O-ring	EPDM	EPDM
12	O-ring	EPDM	EPDM
13	O-ring	EPDM	EPDM
14	Cap	PA	PA66
15	Setting screw	Brass	CW617N4MS
16	Nut Pipe clip	Stainless steel	
17	Matrix nut	Brass	CW617N4MS
18	Down nut	Brass	CW617N4MS

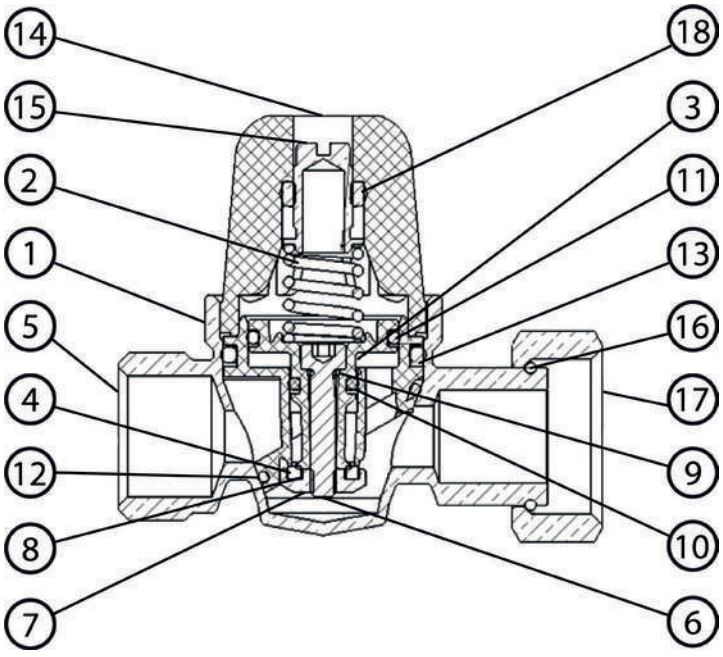

Approvals

ACS WRAS

Application

REDUBAR is an ideal pressure reducing valves to protect hot water storage heaters and houshold appliances.

It is directly fitted upstream of the appliance that you want to protect or to the inlet of the water circuit that you want to protect (kitchen, bathrooms, garden piping...etc)

Installation

- Fit the pressure reducing valves in accessible and non-submersible place (not on the floor to enable maintenance and avoid any risks related to frost)
- Rinse, clean and purge pipes before fitting the REDUBAR
- Respect the direction of flow aas indicated by the arrow engrave on the body
- Fit the REDUBAR to the inlet of the water circuit that you want to protect (kitchen, bathrooms, garden piping etc)
- The setting can be adjusted between 1.5 and 5 bar. To raise or lower the setting, screw or unscrew the setting screw on the top of the appliance with a screwdriver.
- After opening then closing a valve on the downstream circuit, check the pressure on the pressure gauge
- You do not have to comply with any special position
- The REDUBAR technical spécifications do not change wichever operating plan is used
- If there is a risk of back pressure or hammering in the downstream water circuit, in order to protect the pressure reducing valve, a check valve should be installed after the valve outlet.

Operation

Flow :

During water flow, water pressure exercised on the diaphragm decreases, which allows the spring to relax. The piston disc-yoke assembly moves towards the bottom to allow the water to pass.

Flow stoppage :

When water flow stops, the downstream pressure pushes on the diaphragm again, the spring goes back to its initial position, which leads to the valve closing, stopping water from flowing freely.

Setting

The adjustment must be done without flow ie no downstream outflow. The REDUBAR pressure reducing valves is factory pre-set at 3 bar.

They remain adjustable within a 1,5 bar to 4 bar range.

To increase the pressure, tighten the adjusting screw (clockwise as you look at the screw from above) To reduce the pressure, undo the adjusting screw (anticlockwise as you look at the screw from above), slightly open a tap for a moment, close again, then tighten the screwagain until you obtain a desired pressure. Once reached mechanical stop on the adjustment screw, be careful to stop forcing

Max. upstream pressure : 15 bar.

Maintenance

Due to the design, the REDUBAR pressure reducing valve does not need any maintenance if is fitted by a professionnal.

Diaphragm, spring, seat, valve are largely dimensioned to allow precise and constant adjustment all allowing a high flow.

Operating characteristics

REDUBAR - Headloss chart

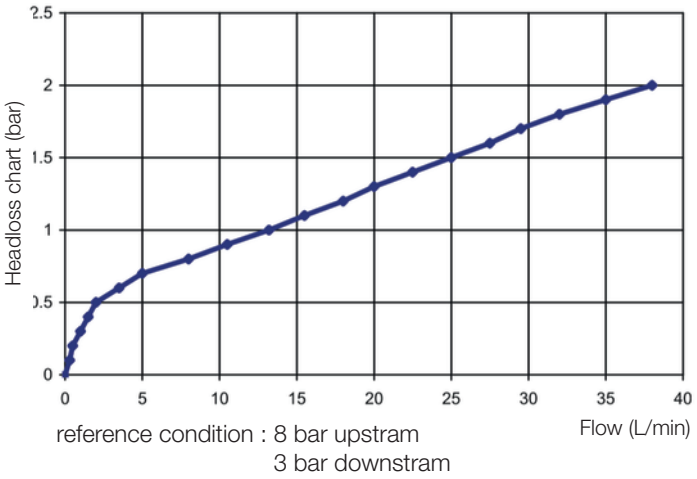

reference condition : 8 bar upstram
3 bar downstram

Sizing

Racc.	A	B	C	D	E	F	G	H
	DN	mm	mm	mm	mm	mm	mm	mm
M / F free nut	3/4*	67	32	35	50	54	15,5	Ø37
Multi-threaded M , F connections at upstream and downstream	3/4, 1/2	65	32	33	50	54	15,5	Ø37

*Specifically for safety groups

M / F free nut 3/4"

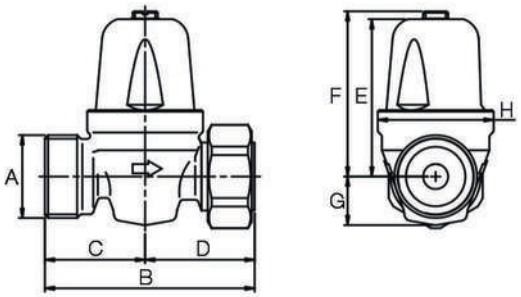

Multi-threaded Male 3/4", Female 1/2"
connections at upstream and downstream

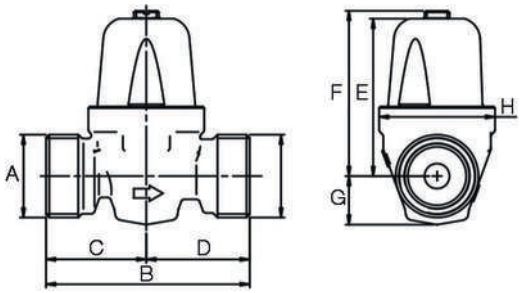

The descriptions and photographs contained in this product specification sheet are supplied by way of information only and are not binding.
Watts reserves the right to carry out any technical and design improvements to its products without prior notice. Warranty : All sales and contracts for sale are expressly conditioned on the buyer's assent to Watts terms and conditions found on its website at www.watts.com. Watts hereby objects to any term, different from or additional to Socla terms, contained in any buyer communication in any form, unless agreed to in a writing signed by an officer of Watts.

WATTS INDUSTRIES France
1590 avenue d'Orange • CS 10101 Sorgues 84275 VEDENE CEDEX • France
Tel. +33 (0)4 90 33 28 28 • Fax +33 (0)4 90 33 28 39
contact@wattswater.com • www.wattswater.eu

© 2022 Watts