E30162

Grinding protection for the installation of Aseptoflex Vario welding adapters

SEALING EDGE GRINDING PROTECTION

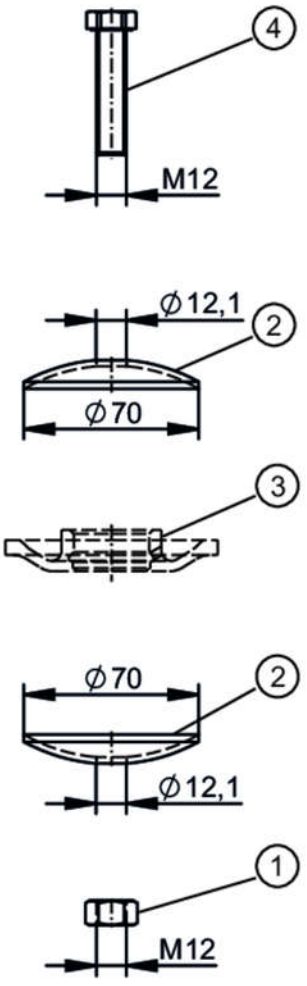

1 hexagon nuts DIN 934-M12
2 half shell Ø 70mm
3 welding adapter not supplied
4 socket head cap screw ISO 4017-M12x50

Application		
Design		Schleifschutz für die Dichtkante von Aseptoflex Vario Einschweißadaptern, E30529, E30531
Application		Schleifen von eingeschweißten Adaptern
Mechanical data		
Weight	[g]	0.001
Materials		VA; stainless steel (1.4301 / 304)
Remarks		
Pack quantity		3 pcs.