Mini / MC35

MC35 UL Beacon + Buzzer 10-30V RGB M12



Part No.:	**241.340.50**
Series:	**MC35**

MECHANICAL DATA	
Height	64 mm
Diameter	35 mm
Materials	PC
Dome colour	Tranclucent
Housing colour	Black
Protection category	IP65 IP69K
Connection	M12 plug 5-pole
Tension relief	Pull-out protection
Type of fixing	Built-in mounting
Working temperature minimum	-20°C
Working temperature maximum	+50°C
Weight with packaging	65 g
Product weight	35 g

ELECTRICAL DATA	
Operating voltage	10-30V
Operating voltage type	DC
Operating voltage tolerance	+/- 10%
Rated operational current	45 mA
Rated inrush current	850 mA
Protection class	Protection class 2
Pollution degree	3 In the connection area: 2

OPTICAL DATA	
Light source	LED
Light colour	MC 7 colours
Optical signal image	Permanent
Service life optical	50,000 h maximum

ACOUSTIC DATA	
Volume (max) at 1m distance	80 dB
Acoustic signal image	Continuous tone
Audio frequency	3400 Hz

APPROVAL DATA	
Conforms with CE	Yes
Conforms with RoHS directive	Yes
WEEE	No

! For additional installation and mounting information, refer to the appropriate user guide at www.werma.com. This printed copy is for information only and is subject to alteration.

Mini / MC35

MC35 UL Beacon + Buzzer 10-30V RGB M12

Conforms with ATEX-directive	No
Conforms with CCC-Ex	No
Conforms with CCC	No
Conforms with UL	cULus
UL Type Rating	Type 4X
Conforms with FCC	No
Conforms with IC	No
EAC certificate available	No
Conforms with UKCA (Importer)	Yes (WERMA (UK) Ltd.)
Conforms with CMIM	No
Conforms with AS-I	No
Conforms with DNV	No
Conforms with RoHS CN	10 years
Conforms with VdS	No
MTTF-value [years]	201

! For additional installation and mounting information, refer to the appropriate user guide at www.werma.com. This printed copy is for information only and is subject to alteration.

Mini / MC35

MC35 UL Beacon + Buzzer 10-30V RGB M12

DRAWING

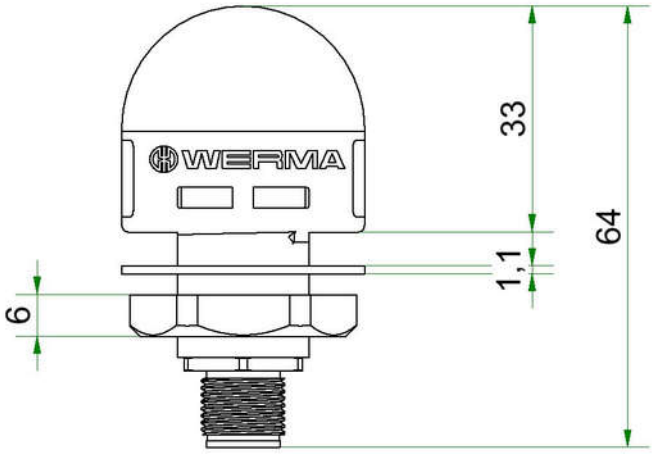

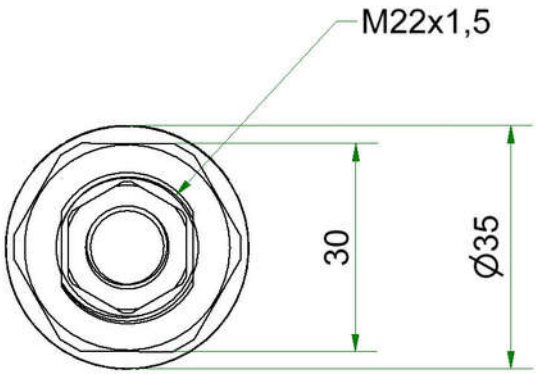

! For additional installation and mounting information, refer to the appropriate user guide at www.werma.com. This printed copy is for information only and is subject to alteration.