Level detection
in solids

Vibration

VEGAVIB 55
VEGAVIB 61 - 63
VEGAVIB 65 - 67





Product Information

VEGA

Contents

1 Description of the measuring principle 3

2 Type overview 5

3 Mounting procedure 9

4 Electrical connection
4.1 Preparing the connection 13
4.2 Wiring plans. 13

5 Adjustment
5.1 Adjustment, general 16

6 Technical data 18

7 Dimensions 25

8 Product code 35

Take note of safety instructions for Ex areas

Please note the Ex specific safety information for installation and operation in Ex areas which you will find on our homepage www.vega.com\services\downloads and which come with the appropriate instrument.In hazardous areas you should take note of the appropriate regulations, conformity and type approval certificates of the sensors and power supply units. The sensors must only be operated in intrinsically safe circuits. The permissible electrical values are stated in the certificate.

29438-EN-040728

1 Description of the measuring principle

Measuring principle

VEGAVIB is a level sensor with vibrating rod or tuning fork for level detection.

It is designed for industrial use in all areas of process technology, preferably in solids.

The vibrating element (vibrating rod or tuning fork) is energized piezoelectrically and vibrates on its mechanical resonance frequency. The piezos are fixed mechanically and are hence not subjected to temperature shock limitations. If the vibrating element is submerged in the product, the vibrating amplitude changes. This change is detected by the integrated oscillator and converted into a switching command.

Typical applications are overfill and dry run protection. Thanks to its simple and robust measuring system, VEGAVIB is nearly unaffected by the chemical and physical properties of the solid.

It works also under strong external vibrations or changing product.

Fault monitoring

The oscillator of VEGAVIB monitors continuously the following criteria:
- correct vibrating frequency
- line break to the piezo drive

If one of the stated failures is detected or in case of voltage loss, the electronics takes on a defined switching condition, e.g. the relay deenergises (safe condition).

Solid detection in water

With VEGAVIB (61, 62, 63, 65, 66, 67) in the version for solid detection in water (option), the vibrating element is adjusted to the density of water. If submerged in water (density 1 g/cm³), VEGAVIB signals uncovered. Only if the vibrating element is also covered with solids (e.g. sand, sludge, etc.), the sensor signals covered.

VEGAVIB 61, 62, 63

Vibrating rod version

VEGAVIB series 60 level switches are available in standard, cable and tube version and offer the suitable instrument for all applications thanks to the various process fittings. They are completely manufactured of stainless steel, have all standard approvals and the vibrating rod can also be polished, e.g. for applications in the food processing industry.

VEGAVIB are practically unaffacted by the product properties and do not have to be adjusted.

The level switches can be used in applications with process temperatures up to 250°C (482°F) and pressures up to 16 bar (232 psi).

They can detect solids up to >0.02 g/cm³ (>0.0007 lbs/in³).

VEGAVIB 65, 66, 67

Tuning fork version

The tuning fork version has all advantages of the vibrating rod version, however is more rugged and can detect very light-weight solids up to >0.008 g/cm³ (>0.0003 lbs/in³).

29438-EN-040728

VEGAVIB 55

Tuning fork version

The difference between VEGAVIB 55 and the VEGAVIB series 60 level switches is the simple plastic process fitting and the limited selection possibilities. It is suitable for solids from >0.08 g/cm³ (>0.003 lbs/in³).

VEGAVIB 55 is only available as screwed version, with plastic housing and without approvals.

The most important advantage of this instrument is the favourable measurement loop price.

29438-EN-040728

2 Type overview

	VEGAVIB 61	VEGAVIB 62	VEGAVIB 63
			
Preferred application:	Solids	Solids	Solids
Length:	-	0.3 ... 80 m (1 ... 262 ft)	0.3 ... 4 m (1 ... 13 ft)
Process fitting:	Thread G1A, G1½A, flanges	Thread G1A, G1½A, flanges	Thread G1A, G1½A, flanges
Process temperature:	-50 ... 150°C (-58 ... 302°F) -50 ... 250°C or -58 ... 482°F (with temp. adapter)	-20 ... 80°C (-4 ... 176°F)	-50 ... 150°C (-58 ... 302°F) -50 ... 250°C or -58 ... 482°F (with temp. adapter)
Process pressure:	-1 ... 16 bar (-100 ... 1600 kPa) (-14.5 ... 232 psi)	-1 ... 6 bar (-100 ... 600 kPa) (-14.5 ... 87 psi)	-1 ... 16 bar (-100 ... 1600 kPa) (-14.5 ... 232 psi)
Signal output	Relay output, transistor output, contactless electronic switch, two-wire output	Relay output, transistor output, contactless electronic switch, two-wire output	Relay output, transistor output, contactless electronic switch, two-wire output
Ruggedness	+	+	+
Sensitivity	+	+	+
Buildup	+	+	+
Cleanability	++	++	++
Installation length	++	++	++
Orientation during installation	++	++	++
Sticking solids	++	++	++

29438-EN-040728

	VEGAVIB 65	**VEGAVIB 66**	**VEGAVIB 67**
			
Preferred application:	Solids	Solids	Solids
Length:	-	0.3 ... 80 m (1 ... 262 ft)	0.3 ... 4 m (1 ... 13 ft)
Process fitting:	Thread G1½A, flanges	Thread G1½A, flanges	Thread G1½A, flanges
Process temperature:	-50 ... 150°C (-58 ... 302°F) -50 ... 250°C or -58 ... 482°F (with temp. adapter)	-20 ... 80°C (-4 ... 176°F)	-50 ... 150°C (-58 ... 302°F) -50 ... 250°C or -58 ... 482°F (with temp. adapter)
Process pressure:	-1 ... 16 bar (-100 ... 1600 kPa) (-14.5 ... 232 psi)	-1 ... 6 bar (-100 ... 600 kPa) (-14.5 ... 87 psi)	-1 ... 16 bar (-100 ... 1600 kPa) (-14.5 ... 232 psi)
Signal output	Relay output, transistor output, contactless electronic switch, two-wire output	Relay output, transistor output, contactless electronic switch, two-wire output	Relay output, transistor output, contactless electronic switch, two-wire output
Ruggedness	++	++	++
Sensitivity	++	++	++
Buildup	++	++	++
Cleanability	-	-	-
Installation length	+	+	+
Orientation during installation	-	-	-
Sticking solids	-	-	-

29438-EN-040728

VEGAVIB 55



Preferred application:	Solids
Length:	-
Process fitting:	Thread G1½A
Process temperature:	-40 ... 80°C (-40 ... 176°F)
Process pressure:	-1 ... 6 bar (-100 ... 600 kPa) (-14.5 ... 232 psi)
Signal output	Relay output, transistor output, contactless electronic switch, two-wire output
Ruggedness	+
Sensitivity	-
Buildup	++
Cleanability	-
Installation length	+
Orientation during installation	-
Sticking solids	-

29438-EN-040728

Housing	 Plastic	 Stainless steel	 Aluminium	 Aluminium (double chamber)
Electronics	 Relay output	 Transistor output	 Contactless electronic switch	 Two-wire output
Sensors	 Vibrating rod	 Tuning fork		
Approvals	 Gas explosion protection	 Dust explosion protection		

29438-EN-040728

3 Mounting procedure

Switching point

In general, VEGAVIB can be mounted in any position. The instrument must be mounted in such a way that the vibrating element is at the height of the requested switching point.

Socket

The vibrating element should protrude into the vessel to avoid buildup. Therefore avoid sockets for flanges and mounting bosses. This is mainly applicable for adhesive products.

Filling opening

Install the instrument in such a way that the vibrating element does not protrude directly into the filling stream. Should such an installation location be necessary, mount a suitable baffle above or in front of the vibrating element, e.g. L80 x 8 DIN 1028 (see Fig. Part "a."). In abrasive solids, mounting acc. to fig. Part "b." has proven. A spout is created in the concave baffle by which wear is avoided.

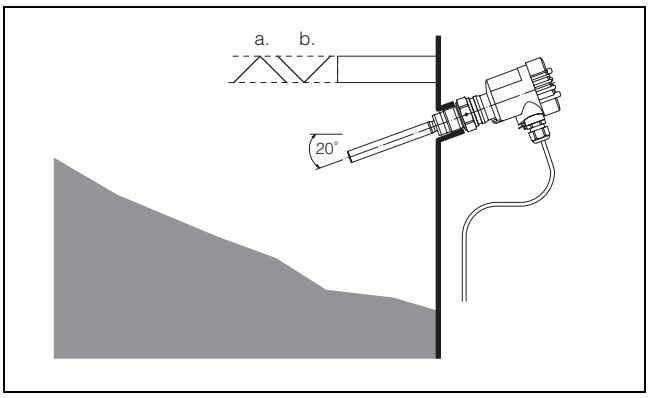

Fig. 1: Horizontal installation

a. convex mounting
b. concave mounting

Horizontal installation

To achieve a very precise switching point, you can install VEGAVIB horizontally. However, if the switching point can have a tolerance of a few centimeters, we recommend mounting VEGAVIB approx. 20° inclined to the bottom to avoid buildup.

Material cone

Material cones can form in solids silos which change the switching point. Please keep this in mind when installing the sensor in the vessel. We recommend an installation location where the vibrating element detects an average value of the material cone.

The vibrating element must be installed appropriately depending on the filling and emptying opening in the vessel.

To compensate the measurement error in cylindrical vessels caused by the material cone, you have to mount the sensor with a distance d/6 from the vessel wall.

29438-EN-040728

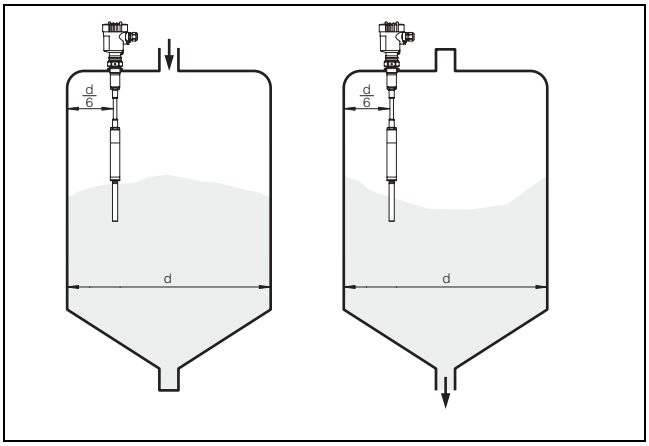

Fig. 2: Filling and emptying in the center

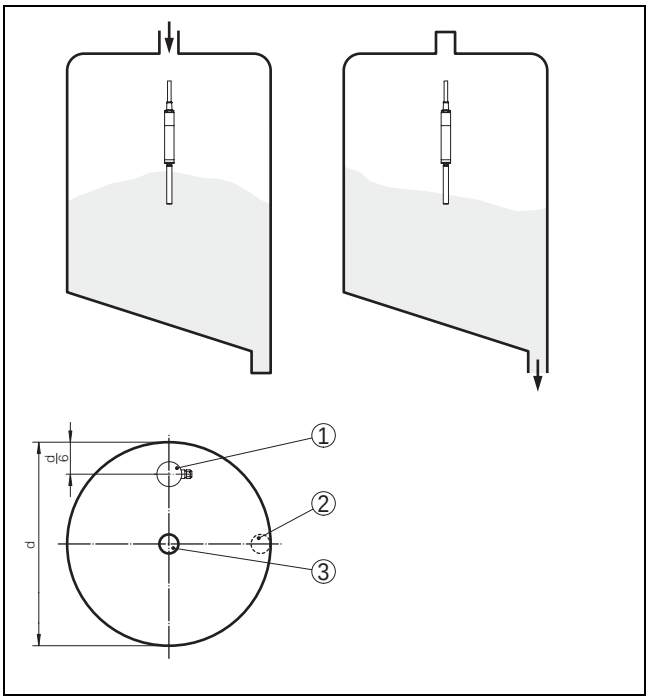

Fig. 3: Filling in the center, emptying laterally

1 VEGAVIB
2 Emptying opening
3 Filling opening

Tensile load

Keep in mind that the max. permissible tensile load of the suspension cable is not exceeded (cable version). This is mainly due in case of very heavy solids and long measuring lengths. The max. permissible tensile load is stated in the Technical data in the Supplement.

Agitators

Due to agitators, vibrations or similar, the level switch can be subjected to strong lateral forces. For this reason, do not use an overlong extension tube for VEGAVIB, but check if you can mount a VEGAVIB 61 or 65 level switch on the side of the vessel in horizontal position.

29438-EN-040728

Extreme vibrations and shocks, e.g. caused by agitators and turbulence in the vessel, can cause the extension tube of VEGAVIB to vibrate. This will cause increased stress on the upper weld joint. Should a longer tube version be necessary, you can provide a suitable straining or fastening directly above the vibrating element to fasten the extension tube.

This measure applies particularly to applications in Ex areas. Make sure that the tube is not bent by this measure.

Inflowing material

If VEGAVIB is mounted in the filling stream, unwanted switchings can be triggered. Therefore mount VEGAVIB at a location in the vessel where no interfering influences, caused e.g. by filling openings, agitators, etc. can occur.

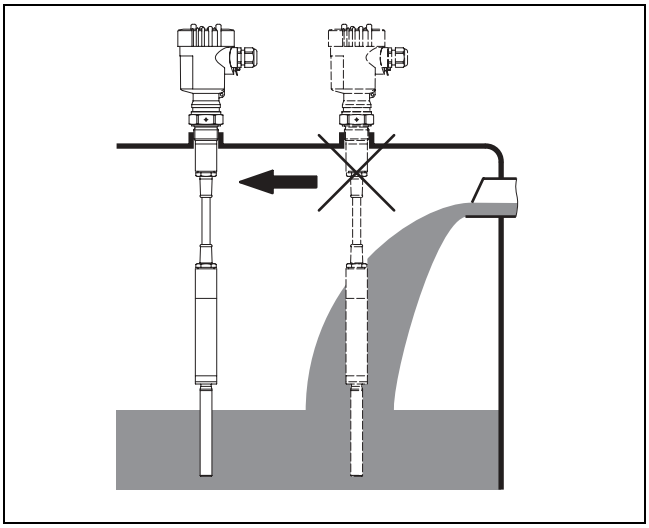

Fig. 4: Inflowing material

Flow

If there are product movements, the tuning fork of VEGAVIB 55, 65, 66 and 67 should be mounted in such a way that the surfaces of the fork are in parallel to the product movement.

29438-EN-040728

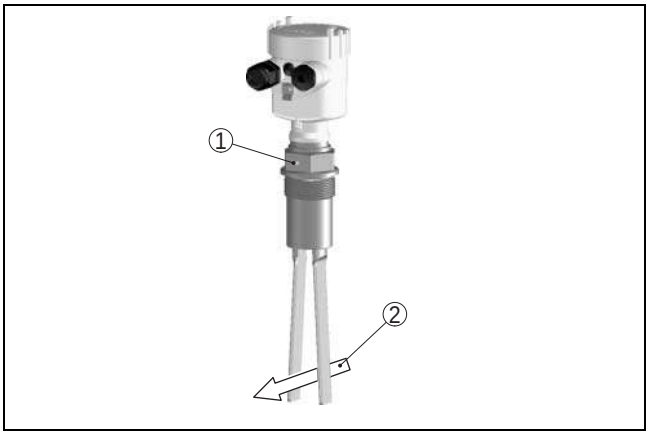

Fig. 5: Orientation of the tuning fork in case of flow

1 Marking with screwed version
2 Direction of flow

Lock fitting

VEGAVIB can be mounted with a lock fitting for height adjustment. Take note of the pressure information of the lock fitting.

Baffle against falling rocks

In applications, e.g. in grit chambers or in sedimentation basins for course sediments, the vibrating element must be protected with a suitable baffle against damages.

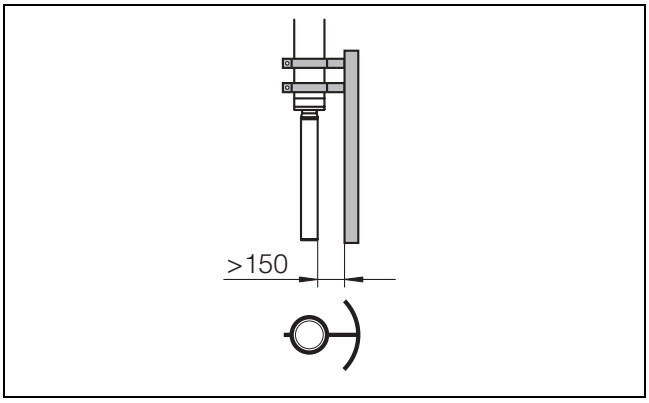

Fig. 6: Baffle to protect against damages

Pressure/Vacuum

The process fitting must be sealed with gauge or low pressure in the vessel. Check if the seal material is resistant against the measured product and the process temperature.

29438-EN-040728

4 Electrical connection

4.1 Preparing the connection

Note safety instructions

Always observe the following safety instructions:

- Connect only in the complete absence of line voltage

Take note of safety instructions for Ex applications

In hazardous areas you should take note of the appropriate regulations, conformity and type approval certificates of the sensors and power supply units.

Select power supply

Connect the power supply acc. to the following diagrams. Oscillators VB60R and VB60C are designed in protection class 1. To maintain this protection class, it is absolutely necessary that the ground conductor is connected to the internal ground terminal. Take note of the general installation regulations. Generally connect VEGAVIB to vessel ground (PA) or in case of plastic vessels to the next ground potential. On the side of the instrument housing there is a ground terminal between the cable entries. This connection serves to drain off electrostatic charges. In Ex applications, the installation regulations for hazardous areas must be noted.

The data for power supply are stated in the Technical data in the Supplement.

Select connection cable

VEGAVIB is connected with standard cable with round wire cross section.An outer cable diameter of 5 ... 9 mm (0.2 ... 0.35 in) ensures the seal effect of the cable entry.

If you are using cable with different diameter or wire cross section, you have to exchange the seal or use a suitable cable entry.

Select connection cable for Ex applications

In hazardous areas, only use approved cable entries for VEGAVIB.

Take note of the corresponding installation regulations for Ex applications.

4.2 Wiring plans

Relay output

We recommend connecting VEGAVIB in such a way that the switching circuit is open in case of level signalling, line break or failure (safe condition).

The relays are always shown in non-operative condition.

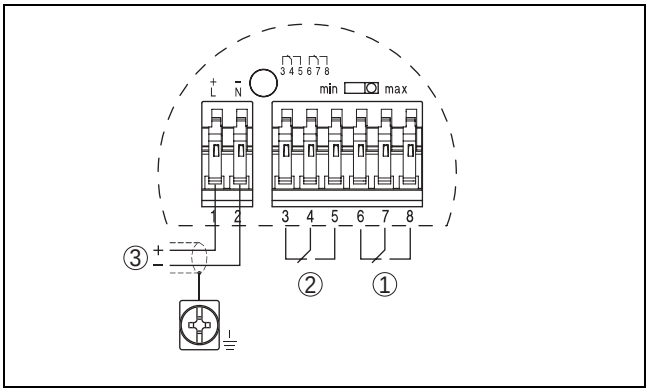

Fig. 7: Wiring plan, single chamber housing

1 Power supply
2 Relay output
3 Relay output

29438-EN-040728

Transistor output

We recommend connecting VEGAVIB in such a way that the switching circuit is open in case of level signalling, line break or failure (safe condition).

For control of relays, contactors, magnet values, warning lights, horns as well as PLC inputs.

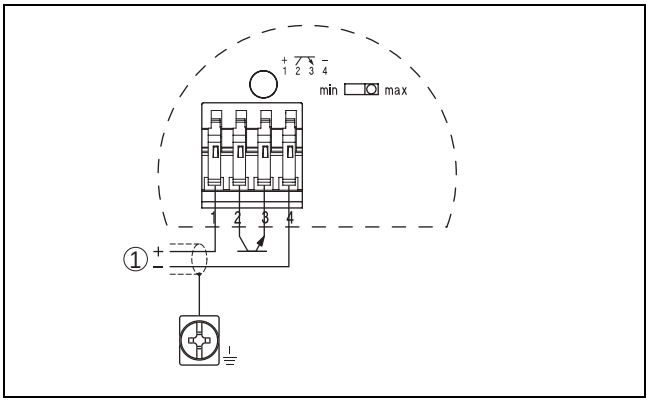

Fig. 8: Wiring plan, single chamber housing

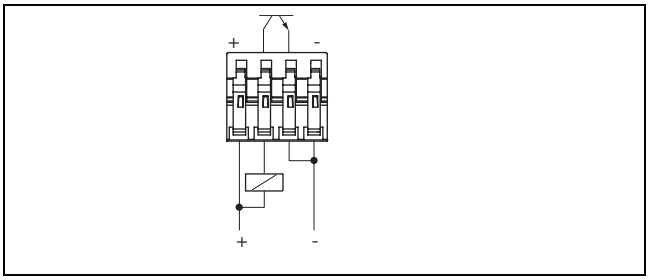

Fig. 9: NPN action

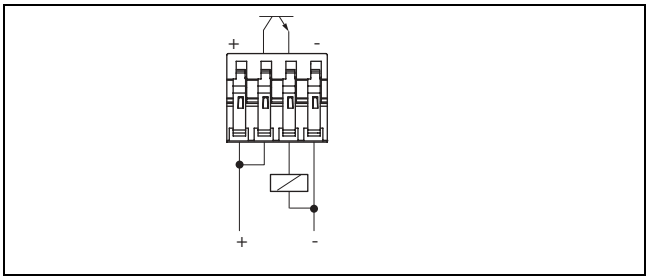

Fig. 10: PNP action

Contactless electronic switch

We recommend connecting VEGAVIB in such a way that the switching circuit is open in case of level signalling, line break or failure (safe condition).

The contactless electronic switch is always shown in non-operative condition.

For direct control of relays, contactors, magnet valves, warning lights, horns etc. Must not be operated without connected load as the oscillator can be destroyed when connected directly to mains. Not suitable for connection to low voltage PLC inputs.

Domestic current is temporarily lowered below 1 mA after switching off the load so that contactors, whose holding current is lower than the constant domestic current of the electronics, are reliably switched off.

When VEGAVIB is used as part of an overfill protection system acc. to WHG, also note the regulations of the general type approval.

29438-EN-040728

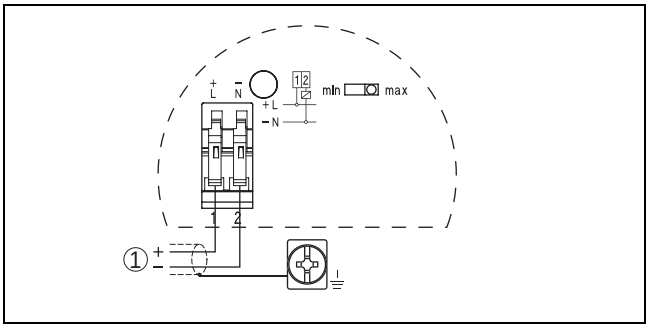

Fig. 11: Wiring plan, single chamber housing

1 Screening

Two-wire output

We recommend connecting VEGAVIB in such a way that the switching circuit is open in case of level signalling, line break or failure (safe condition).

For connection to a VEGATOR signal conditioning instrument dto. Ex. Ex. power supply via the connected VEGATOR signal conditioning instrument. For further information is available in the Technical data in the Supplement, Ex-technical data are available in the supplied safety information manual.

The wiring example is applicable for all suitable signal conditioning instruments.

Take note of the operating instructions manual of the signal conditioning instrument. Suitable signal conditioning instruments are listed in the Technical data.

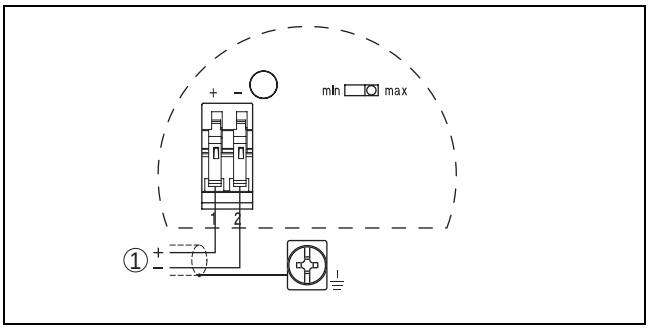

Fig. 12: Wiring plan, single chamber housing

1 Power supply

5 Adjustment

5.1 Adjustment, general

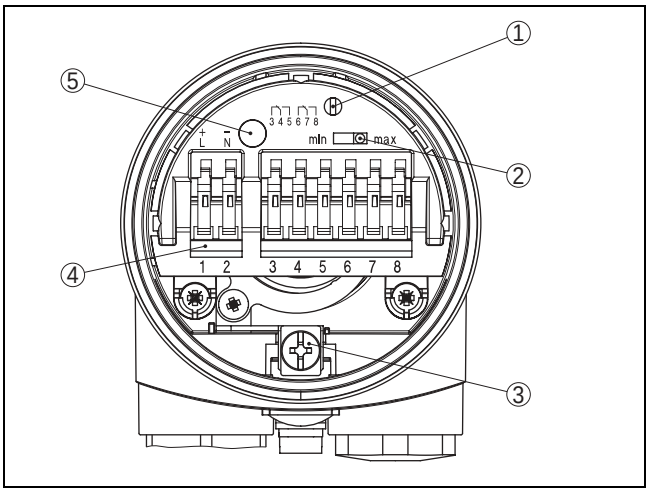

Fig. 13: Adjustment elements, e.g. relay output (VB60R)

1 Potentiometer for switching point adaptation (not with VEGAVIB 55)
2 DIL switch for mode adjustment
3 Ground terminal
4 Terminals
5 LED display

Switching point adaptation (1)

VEGAVIB 61, 62, 63

With the potentiometer, the switching point of VEGAVIB 61, 62 and 63 can be adapted to the solid. The switching point is preset and covered by a label. It must only be modified in special cases.

As a default setting, the potentiometer of is set to mid position (0.05 ... 1 g/cm³ or 0.002 ... 0.036 lbs/in³). In very light solids you have to turn the potentiometer to complete left position (0.02 ... 0.1 g/cm³ or 0.0007 ... 0.0036 lbs/in³). By doing this, VEGAVIB will be more sensitive and light solids can be detected more reliably.

For very heavy solids you turn the potentiometer to complete right position (> 0.3 g/cm³ or > 0.011 lbs/in³). By doing this, VEGAVIB will be more insensitive and heavy solids can be removed more easily by stronger vibration.

For instruments detecting solids in water, these values are not applicable. In this case, the potentiometer is preset to complete right position and should not be changed.

VEGAVIB 65, 66, 67

VEGAVIB with tuning fork are preset to a product density of >0.02 g/cm³ (>0.0007 lbs/in³). In very light solids you have to turn the potentiometer to complete left position (0.02 ... 0.1 g/cm³ or 0.0007 ... 0.0036 lbs/in³). By doing this, the tuning fork will be more sensitive and can detect very light solids, such as e.g. aerosile more reliably.

29438-EN-040728

VEGAVIB 55

VEGAVIB 55 can detect solids from a product density of >0.08 g/cm³ (>0.003 lbs/in³).

Mode adjustment (2)

With the mode adjustment (min./max.) the switching condition of the output can be modified. You can set the required mode (max. - max. detection or overfill protection, min. - min. detection or dry run protection).

LED display (5)

Diode for indication of the switching condition.

29438-EN-040728

6 Technical data

General data

VEGAVIB 55	Materials, wetted parts	
	– process fitting - thread	PP
	– vibrating element	1.4435 (316L)/1.4462 (318S13)
	Materials, non-wetted parts	
	– housing	plastic PBT (Polyester)
	– seal ring between housing and housing cover	silicone
	– ground terminal	stainless steel 1.4571(316Ti)/1.4435 (316L)
	Weight	1150 g (40 oz)
	Max. lateral load	400 N
VEGAVIB 61, 65	Materials, wetted parts	
	– process fitting - thread	1.4435 (316L)
	– process fitting - flange	1.4435 (316L)
	– seal	PUR, CR, NBR
	– vibrating element	1.4435 (316L)/1.4462 (318S13)
	– extension tube (VEGAVIB 61) ø 29 mm (1.14 in)	1.4435 (316L)
	– extension tube (VEGAVIB 65) ø 43 mm (1.7 in)	1.4435 (316L)
	Materials, non-wetted parts	
	– housing	plastic PBT (Polyester), Alu-die casting powder-coated, stainless steel 1.4435 (316L)
	– seal ring between housing and housing cover	NBR (stainless steel housing), silicone (Alu/plastic housing)
	– ground terminal	stainless steel 1.4571(316Ti)/1.4435 (316L)
	Weights	
	– VEGAVIB 61 with plastic housing	1150 g (40 oz)
	– VEGAVIB 61 with Aluminium housing	1600 g (56 oz)
	– VEGAVIB 61 with stainless steel housing	1950 g (69 oz)
	– VEGAVIB 65 with plastic housing	1500 g (53 oz)
	– VEGAVIB 65 with Aluminium housing	1950 g (69 oz)
	– VEGAVIB 65 with stainless steel housing	2300 g (81 oz)
	Max. lateral load	400 N
VEGAVIB 62, 66	Materials, wetted parts	
	– process fitting - thread	1.4435 (316L)
	– process fitting - flange	1.4435 (316L)
	– seal	PUR, CR, NBR
	– vibrating element	1.4435 (316L)/1.4462 (318S13)
	– suspension cable	PUR

29438-EN-040728

	Materials, non-wetted parts	
	– housing	plastic PBT (Polyester), Alu-die casting powder-coated, stainless steel 1.4435 (316L)
	– seal ring between housing and housing cover	NBR (stainless steel housing), silicone (Alu/plastic housing)
	– ground terminal	stainless steel 1.4571(316Ti)/1.4435 (316L)
	Weights	
	– VEGAVIB 62 with plastic housing	1150 g (40 oz)
	– VEGAVIB 62 with Aluminium housing	1600 g (56 oz)
	– VEGAVIB 62 with stainless steel housing	1950 g (69 oz)
	– VEGAVIB 66 with plastic housing	1500 g (53 oz)
	– VEGAVIB 66 with Aluminium housing	1950 g (69 oz)
	– VEGAVIB 66 with stainless steel housing	2300 g (81 oz)
	– suspension cable	approx. 165 g/m (1.8 oz/ft)
	Max. permissible tensile load	3000 N (675 lbs)
	Sensor length	0.3 ... 80 m (1 ... 262 ft)
VEGAVIB 63, 67	Materials, wetted parts	
	– process fitting - thread	1.4435 (316L)
	– process fitting - flange	1.4435 (316L)
	– seal	PUR, CR, NBR
	– vibrating element	1.4435 (316L)/1.4462 (318 S13)
	– extension tube (VEGAVIB 63) ø 29 mm (1.14 in)	1.4435 (316L)
	– extension tube (VEGAVIB 67) ø 43 mm (1.7 in)	1.4435 (316L)
	Materials, non-wetted parts	
	– housing	plastic PBT (Polyester), Alu-die casting powder-coated, stainless steel 1.4435 (316L)
	– seal ring between housing and housing cover	NBR (stainless steel housing), silicone (Alu/plastic housing)
	– ground terminal	stainless steel 1.4571(316Ti)/1.4435 (316L)
	Weights	
	– VEGAVIB 63 with plastic housing	1150 g (40 oz)
	– VEGAVIB 63 with Aluminium housing	1600 g (56 oz)
	– VEGAVIB 63 with stainless steel housing	1950 g (69 oz)
	– VEGAVIB 67 with plastic housing	1500 g (53 oz)
	– VEGAVIB 67 with Aluminium housing	1950 g (69 oz)
	– VEGAVIB 67 with stainless steel housing	2300 g (81 oz)
	– extension tube (VEGAVIB 63) ø 29 mm (1.14 in)	approx. 1450 g/m (15.6 oz/ft)
	– extension tube (VEGAVIB 67) ø 43 mm (1.7 in)	approx. 2000 g/m (21.5 oz/ft)
	Sensor length	0.3 ... 4 m (1 ... 13 ft)

29438-EN-040728

Output variable

Relay output	Output	relay output (DPDT), 2 floating spdts
	Turn-on voltage – min. – max.	 10 mV 253 V AC, 253 V DC
	Switching current – min. – max.	 10 µA 5 A AC, 1 A DC
	Breaking capacitance – max.	 1250 VA, 50 W
	Contact material (relay contacts)	AgCdO and Au plated
	Modes (adjustable)	min. / max.
	Delay time – when being covered – when being uncovered	 approx. 0.5 s approx. 1 s
Transistor output	Output	floating transistor output, overload and permanently shortcircuit proof
	Load current	max. 400 mA
	Turn-on voltage	max. 55 V DC
	Blocking current	< 100 µA
	Modes (adjustable)	min./max.
	Delay time – when being covered – when being uncovered	 approx. 0.5 s approx. 1 s
Contactless electronic switch	Output	Contactless electronic switch
	Modes (adjustable)	min./max.
	Delay time – when being covered – when being uncovered	 approx. 0.5 s approx. 1 s

29438-EN-040728

Two-wire output

Output	Two-wire output
Output signal	
– min. mode	vibrating element uncovered - 16 mA ±1 mA; vibrating element covered - 8 mA ±1 mA
– max. mode	vibrating element uncovered - 8 mA ±1 mA; vibrating element covered - 16 mA ±1 mA
– fault signal	< 2 mA
Modes (adjustable)	min./max.
Delay time	
– when being covered	approx. 0.5 s
– when being uncovered	approx. 1 s

Ambient conditions

Ambient temperature on the housing	-40 ... +80°C (-40 ... 176°F)
Storage and transport temperature	-40 ... +80°C (-40 ... 176°F)

Process conditions

VEGAVIB 55

Parameter	level of solids
Process pressure	-1 ... 6 bar (-14.5 ... 87 psi) at PN 40
Process temperature VEGAVIB of 1.4435 (316L)	-40 ... 80°C (-40 ... 176°F)
Density	> 0.08 g/cm³ (> 0.003 lbs/in³)
Granular size	ø max. 15 mm (ø max. 0.6 in)

VEGAVIB 61, 63, 65, 67

Parameter	level of solids
Process pressure	-1 ... 16 bar (-14.5 ... 232 psi) at PN 40

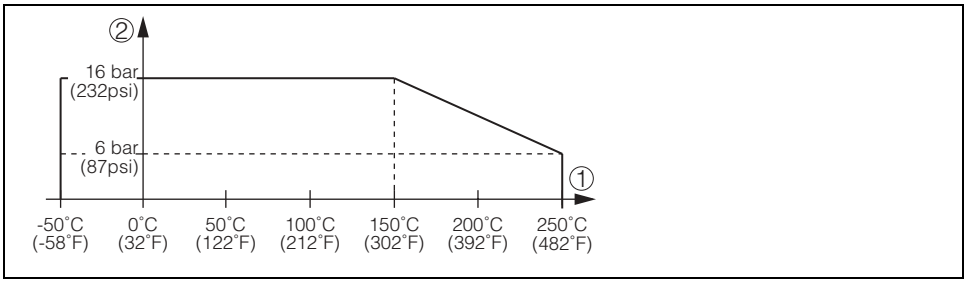

Fig. 14: Process pressure - Product temperature

1 Product temperature
2 Process pressure

Process temperature VEGAVIB of 1.4435 (316L)	-50 ... 150°C (-58 ... 302°F)
Process temperature (thread or flange temperature) with temperature adapter (option)	-50 ... 250°C (-58 ... 482°F)

29438-EN-040728

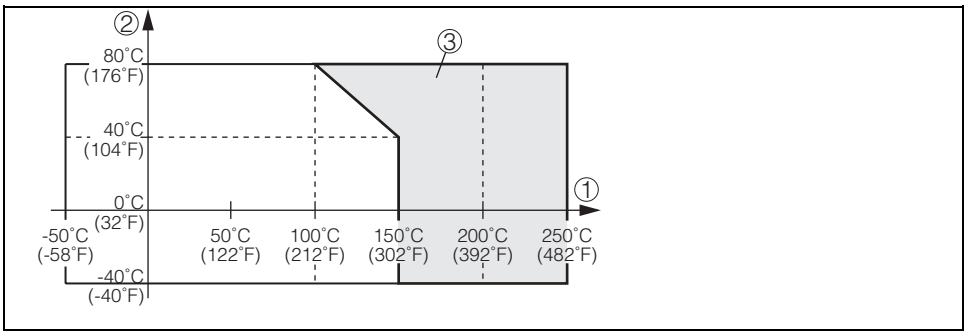

Fig. 15: Ambient temperature - Product temperature

1 Product temperature
2 Ambient temperature
3 Temperature range with temperature adapter

Density (VEGAVIB 61, 63)	> 0.02 g/cm³ (> 0.0007 lbs/in³)
Density (VEGAVIB 65, 67)	> 0.008 g/cm³ (> 0.0003 lbs/in³)
Granular size (VEGAVIB 61, 63)	ø max. 10 mm (ø max. 0.4 in)
Granular size (VEGAVIB 65, 67)	ø max. 15 mm (ø max. 0.6 in)

VEGAVIB 62, 66

Parameter	level of solids
Process pressure	-1 ... 6 bar (-14.5 ... 87 psi) at PN 40
Process temperature VEGAVIB of 1.4435 (316L)	-20 ... 80°C (-4 ... 176°F)
Density (VEGAVIB 62)	> 0.02 g/cm³ (> 0.0007 lbs/in³)
Density (VEGAVIB 66)	> 0.008 g/cm³ (> 0.0003 lbs/in³)
Granular size (VEGAVIB 62)	ø max. 10 mm (ø max. 0.4 in)
Granular size (VEGAVIB 66)	ø max. 15 mm (ø max. 0.6 in)

Electromechanical data

Cable entry/plug (dependent on the version)	
– single chamber housing	• 1 x cable entry M20x1.5 (cable-ø 5 ... 9 mm), 1 x blind stopper M20x1.5, attached 1 x cable entry M20x1.5 or: • 1 x cable entry ½ NPT, 1 x blind stopper ½ NPT, 1 x cable entry ½ NPT or: • 1 x plug M12x1, 1 x blind stopper M20x1.5
Spring-loaded terminals	for wire cross sections up to 1.5 mm²

29438-EN-040728

Adjustment elements

Electronics versions - relay output, transistor output, contactless electronic switch	Mode switch – min. – max.	 Min. detection or dry run protection Max. detection or overfill protection
Electronics version - two-wire output	Mode switch – min. – max.	 vibrating element uncovered - 16 mA ±1 mA vibrating element covered - 8 mA ±1 mA vibrating element uncovered - 8 mA ±1 mA vibrating element covered - 16 mA ±1 mA

Power supply

Relay output	Supply voltage	20 ... 253 V AC, 50/60 Hz, 20 ... 72 V DC (at U > 60 V DC the ambient temperature can be max. 50°C/122°F)
	Power consumption	1 ... 8 VA (AC), approx. 1.3 W (DC)
Transistor output	Supply voltage	10 ... 55 V DC
	Power consumption	max. 0.5 W
Contactless electronic switch	Supply voltage	20 ... 253 V AC, 50/60 Hz, 20 ... 253 V DC
	Domestic current requirement	approx. 3 mA (via load circuit)
	Load current – min. – max.	 10 mA 400 mA (with I > 300 mA the ambient temperature can be max. 60°C) max. 4 A up to 40 ms
Two-wire output	Supply voltage	10 ... 36 V DC (via the VEGA signal conditioning instrument)

Electrical protective measures

Electronics versions - relay output, contactless electronic switch	Protection	IP 66/IP 67
	Overvoltage category	III
	Protection class	I
Electronics versions - transistor output, two-wire output	Protection	IP 66/IP 67
	Overvoltage category	III
	Protection class	II

29438-EN-040728

Approvals

VEGAVIB 55	VEGAVIB 55 has no approvals.
VEGAVIB 61 - 67, electronics versions - relay output, transistor output, contactless electronic switch	ATEX II 1/2G, 2G EEx d ia IIC T6 ATEX II 1/2 D IP66 T ATEX II 1G, 1/2G, 2G EEx ia IIC T6
VEGAVIB 61 - 67, electronics version - two-wire output	ATEX II 1G, 1/2G, 2G EEx ia IIC T6 + ATEX II 1/2 D IP66 T6 ATEX II 1/2G, 2G EEx d ia IIC T6 ATEX II 1/2 D IP66 T

CE conformity

Electronics versions - relay output, transistor output, two-wire output	EMVG (89/336/EWG), Emission: EN 61326: 1997 (class B), Susceptibility: EN 61326: 1997/A1: 1998 NSR (73/23/EWG), EN 61010-1: 2001.
Electronics version - contactless electronic switch	EMVG (89/336/EWG), Emission: EN 61326/A1: 1998 (class B), Susceptibility: EN 61326: 1997/A1: 1998 NSR (73/23/EWG), EN 61010-1: 2001.

29438-EN-040728

7 Dimensions

Housing

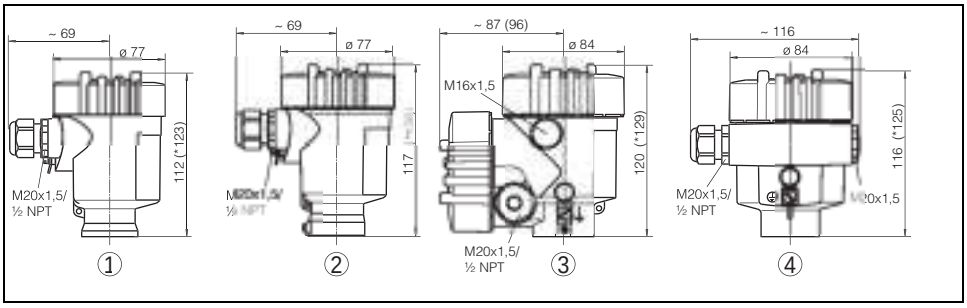

Fig. 16: Housing versions (VEGAVIB 55 only with plastic housing)

1 Plastic housing
2 Stainless steel housing
3 Aluminium double chamber housing
4 Aluminium housing

VEGAVIB 55

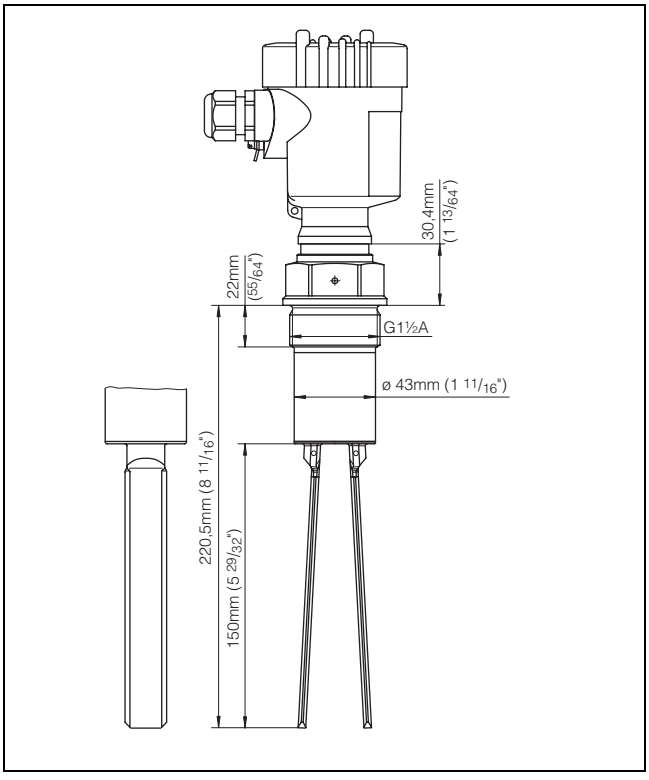

Fig. 17: VEGAVIB 55 - Screwed version G1½

29438-EN-040728

VEGAVIB 61

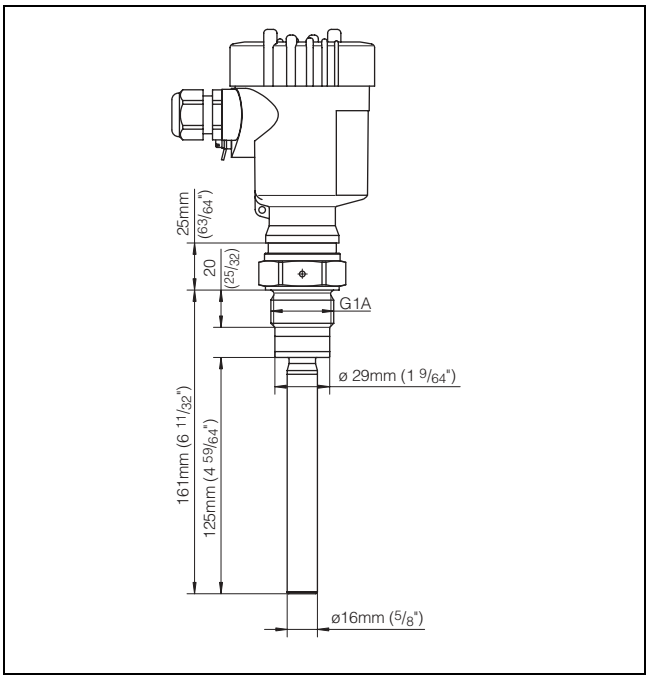

Fig. 18: VEGAVIB 61 - Screwed version G1

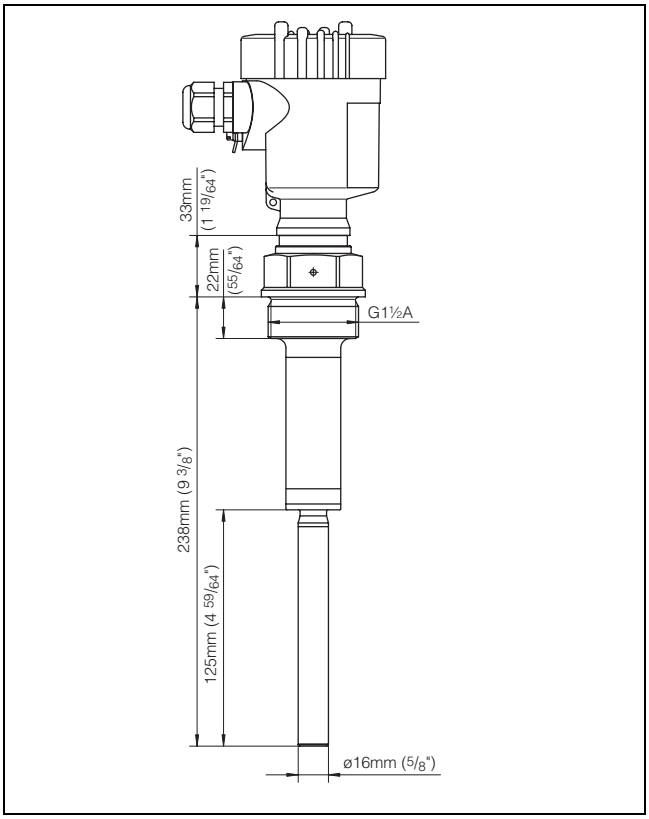

Fig. 19: VEGAVIB 61 - Screwed version G1½

29438-EN-040728

VEGAVIB 62

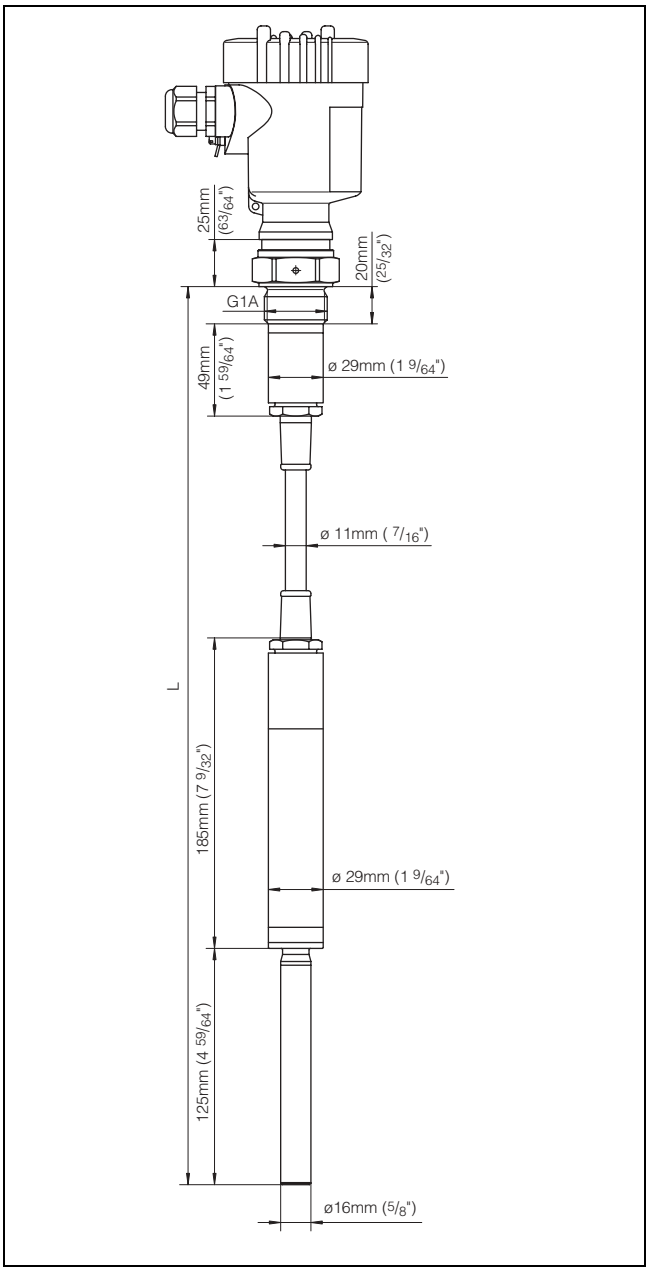

Fig. 20: VEGAVIB 62 - Screwed version G1

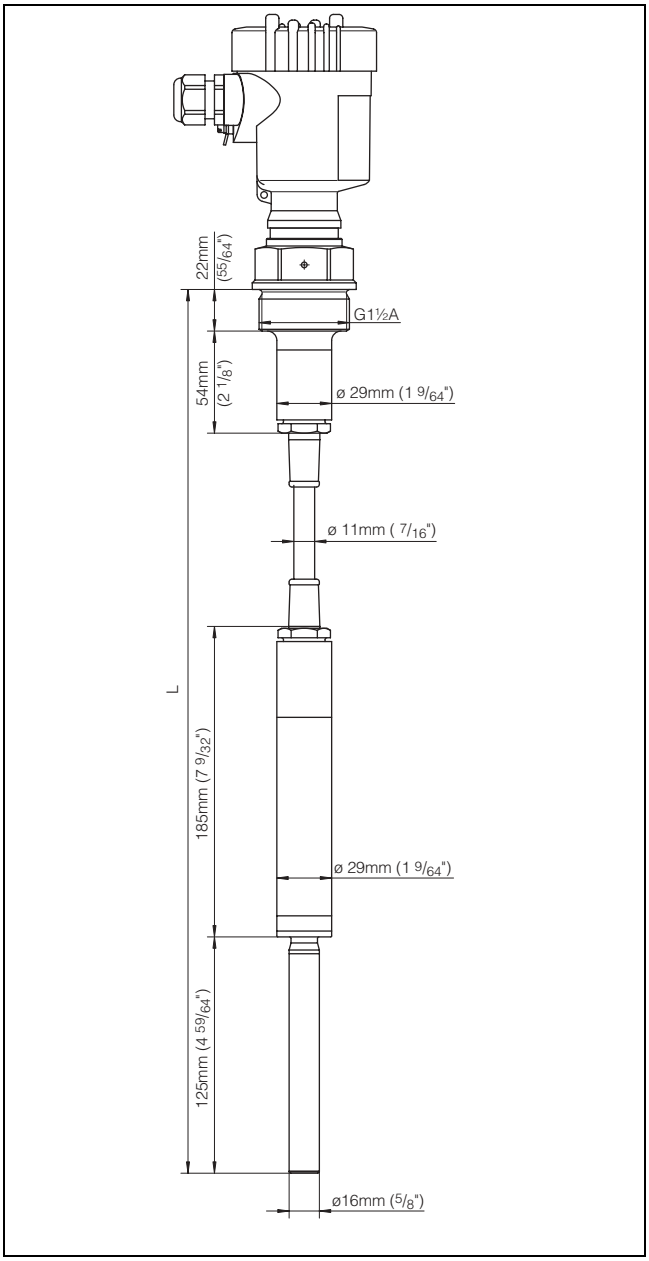

Fig. 21: VEGAVIB 62 - Screwed version G1½

VEGAVIB 63

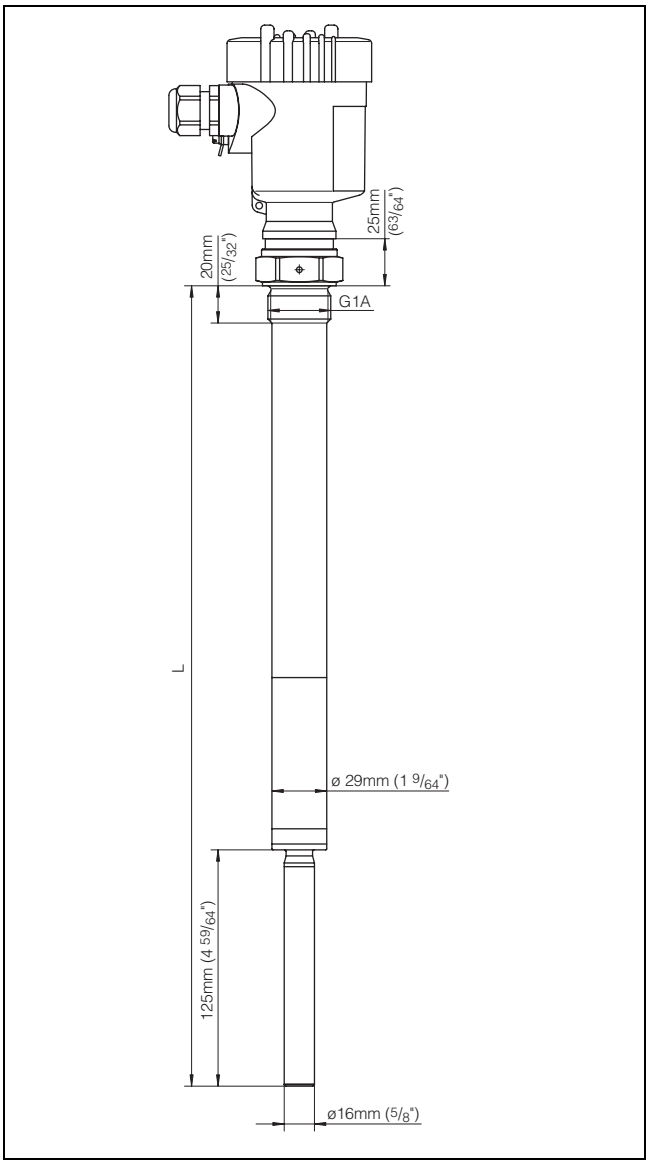

Fig. 22: VEGAVIB 63 - Screwed version G1

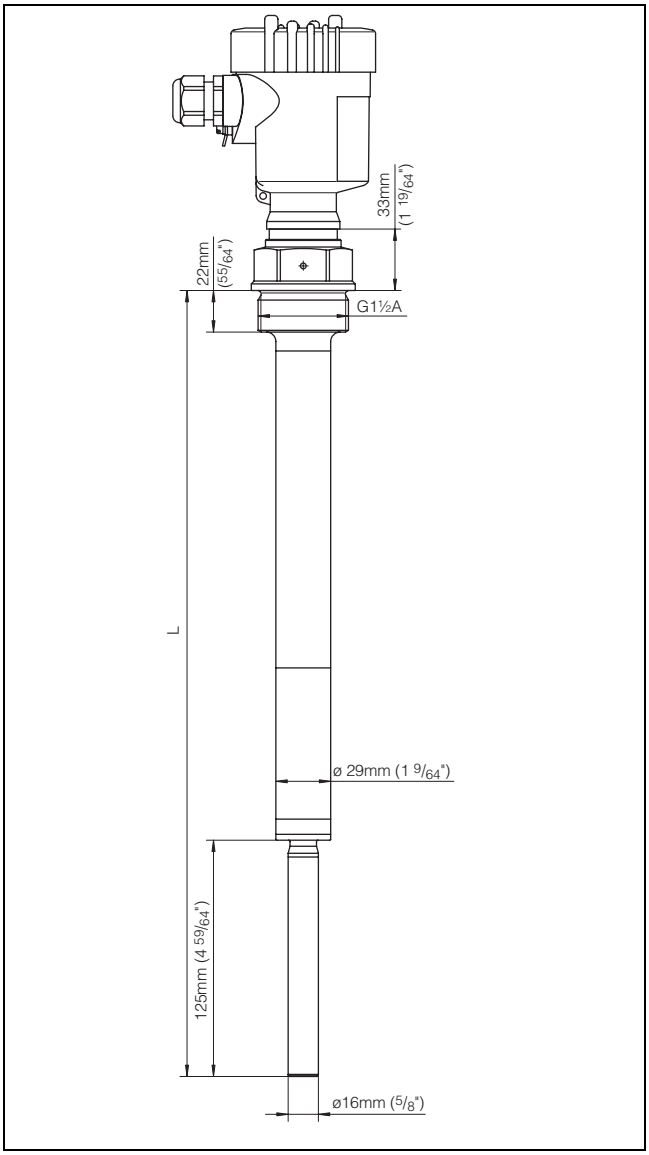

Fig. 23: VEGAVIB 63 - Screwed version G1½

VEGAVIB 65

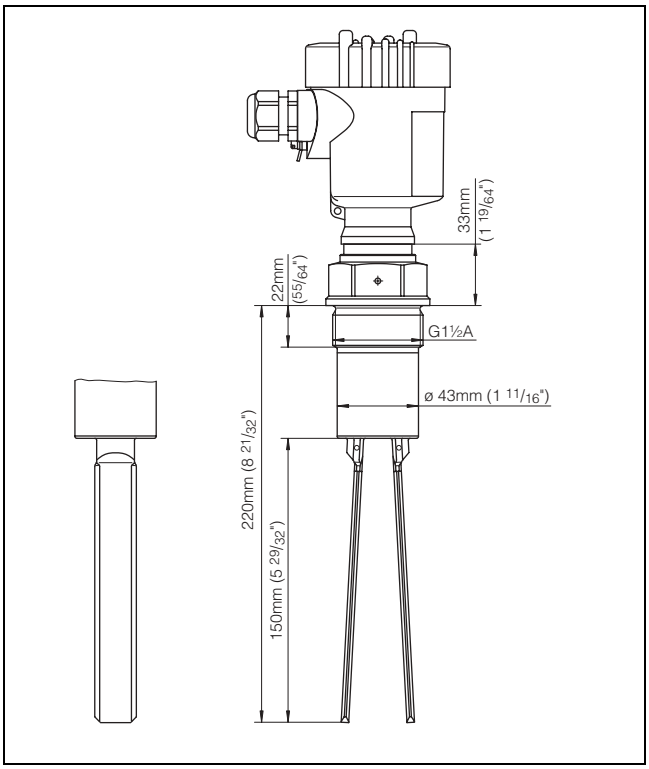

Fig. 24: VEGAVIB 65 - Screwed version G1½

VEGAVIB 66

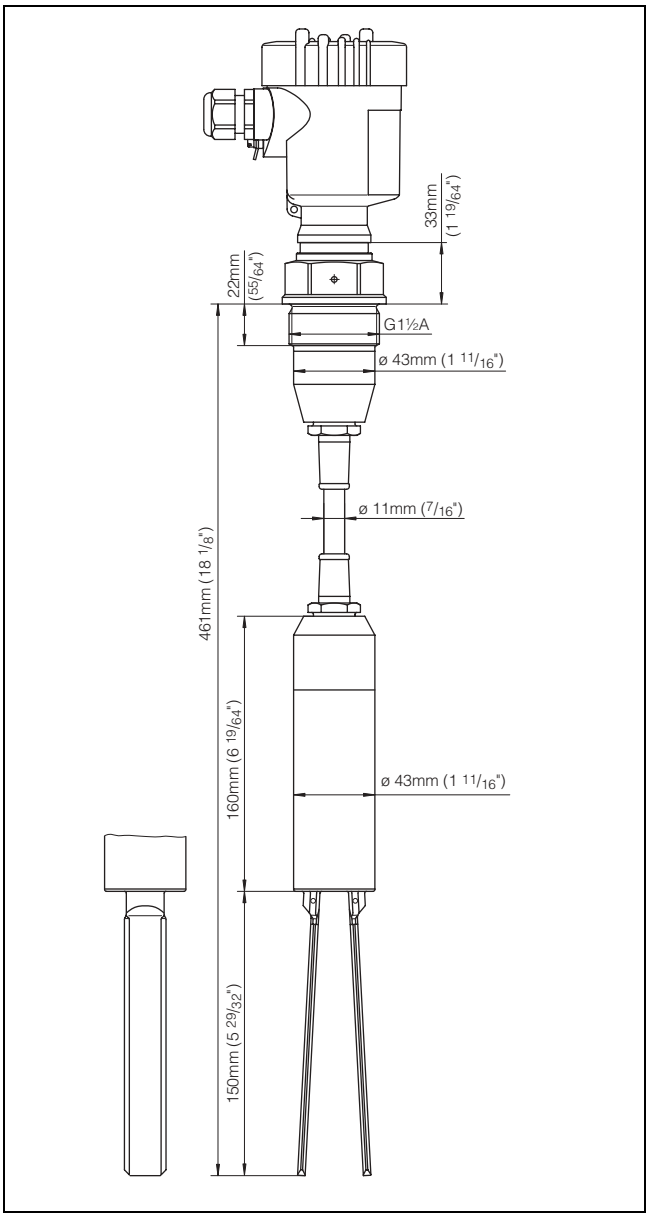

Fig. 25: VEGAVIB 66 - Screwed version G1½

VEGAVIB 67

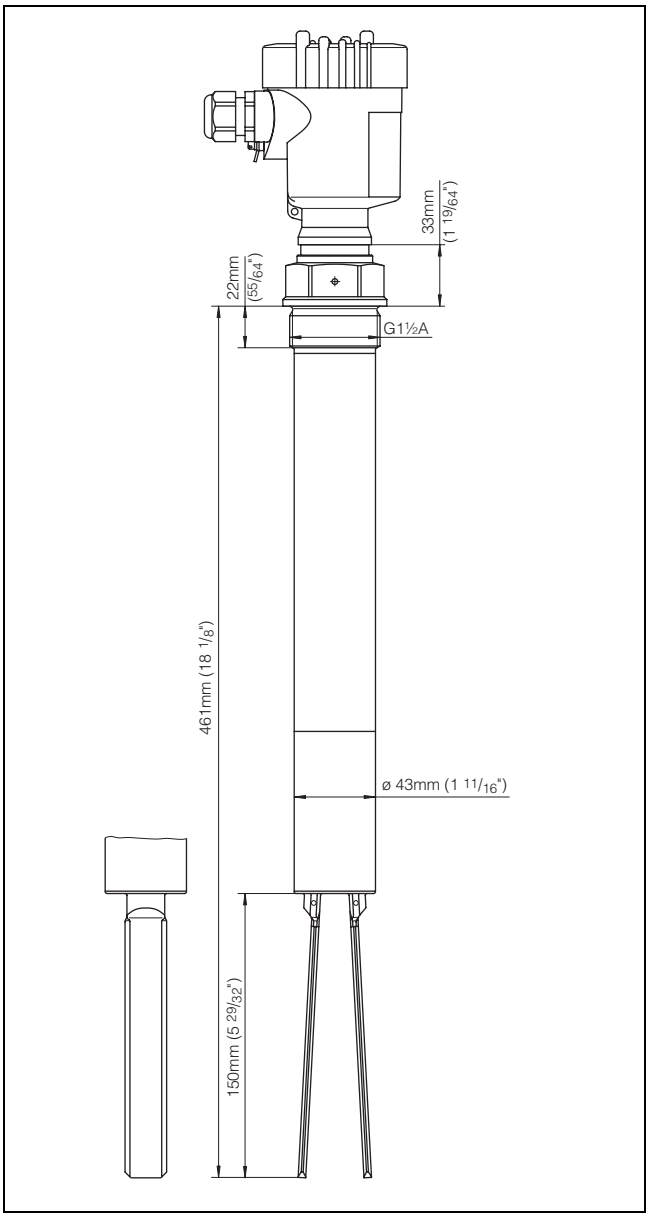

Fig. 26: VEGAVIB 67 - Screwed version G1½

Temperature adapter

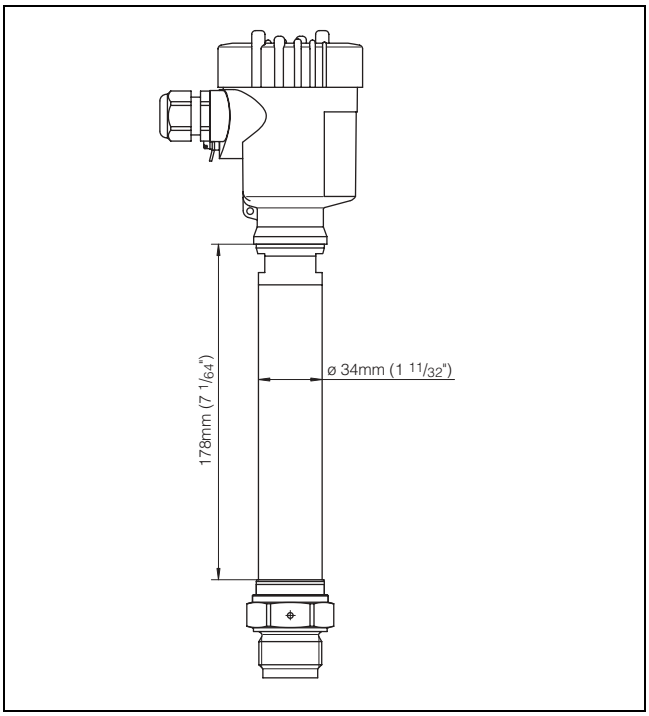

Fig. 27: Temperature adapter (only for VEGAVIB 61, 63, 65 and 67)

29438-EN-040728

8 Product code



Information:
The product codes are only excerpts of the possible product versions. You will find detailed information in the VEGA product catalogue or under **www.vega.com**.

29438-EN-040728

VEGAVIB 55

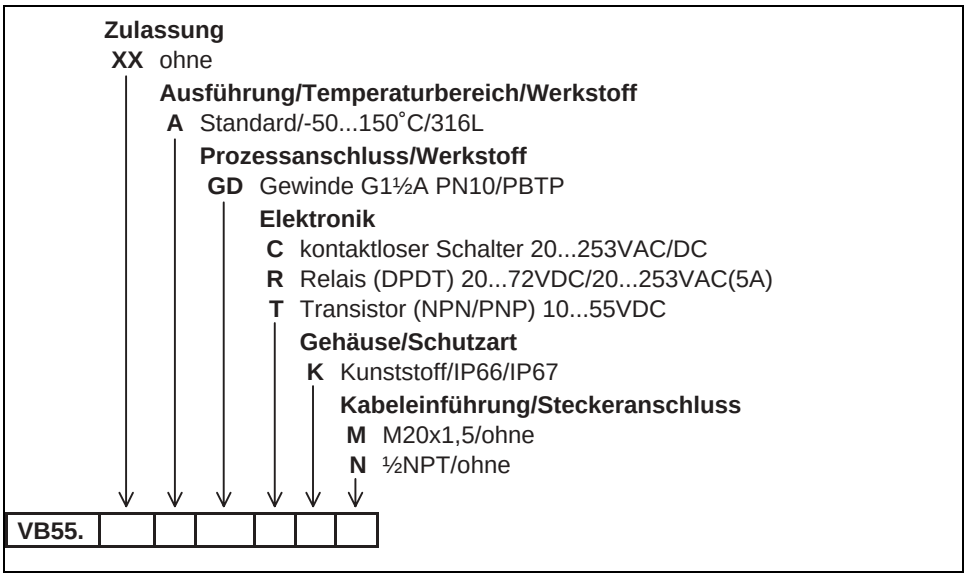

Fig. 28: Excerpt of the product code

VEGAVIB 61

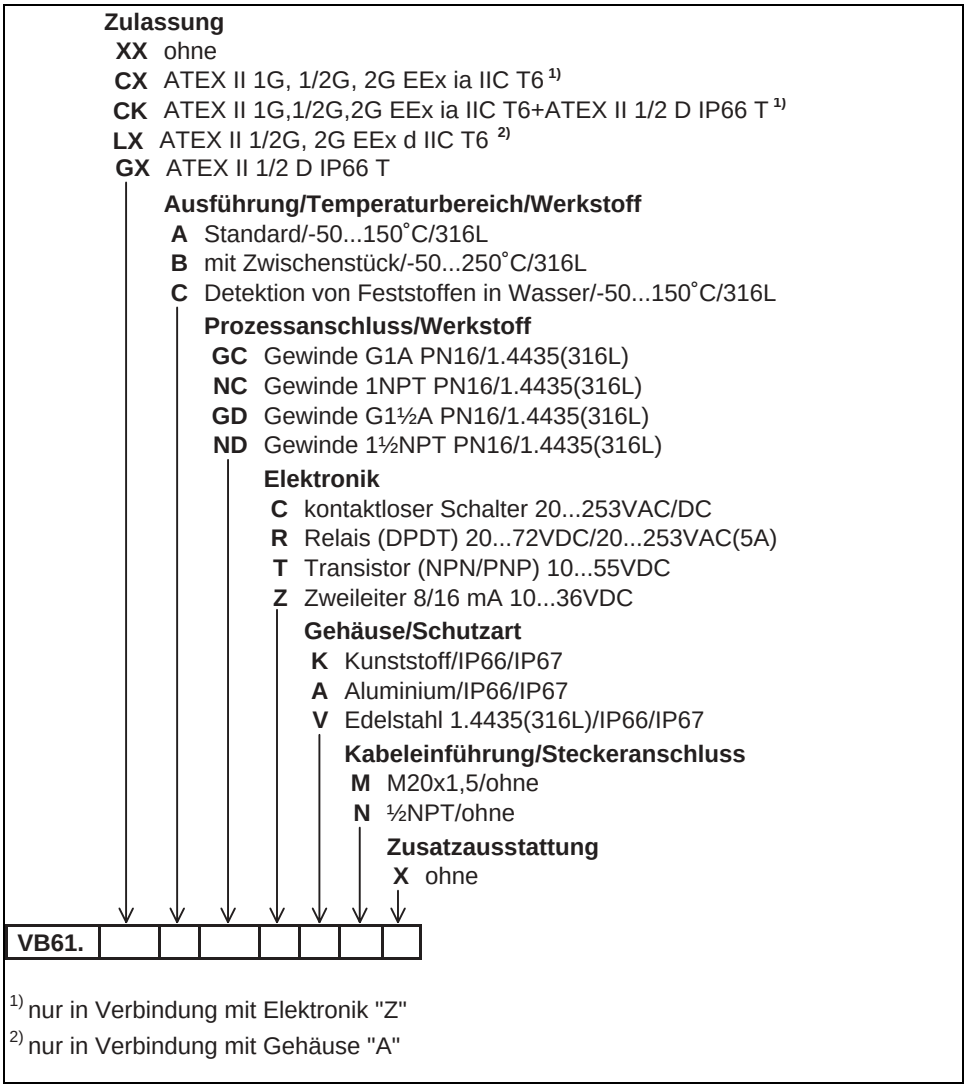

Fig. 29: Excerpt of the product code

VEGAVIB 62

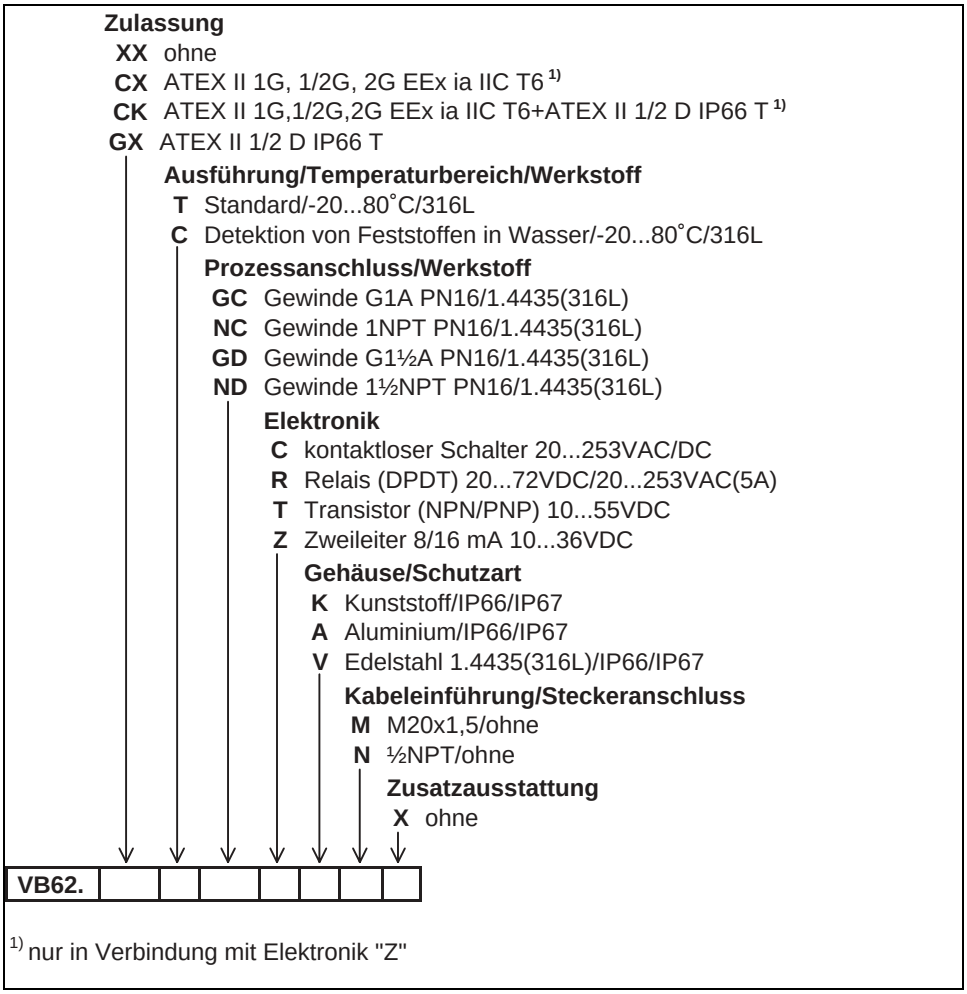

Fig. 30: Excerpt of the product code

VEGAVIB 63

29438-EN-040728

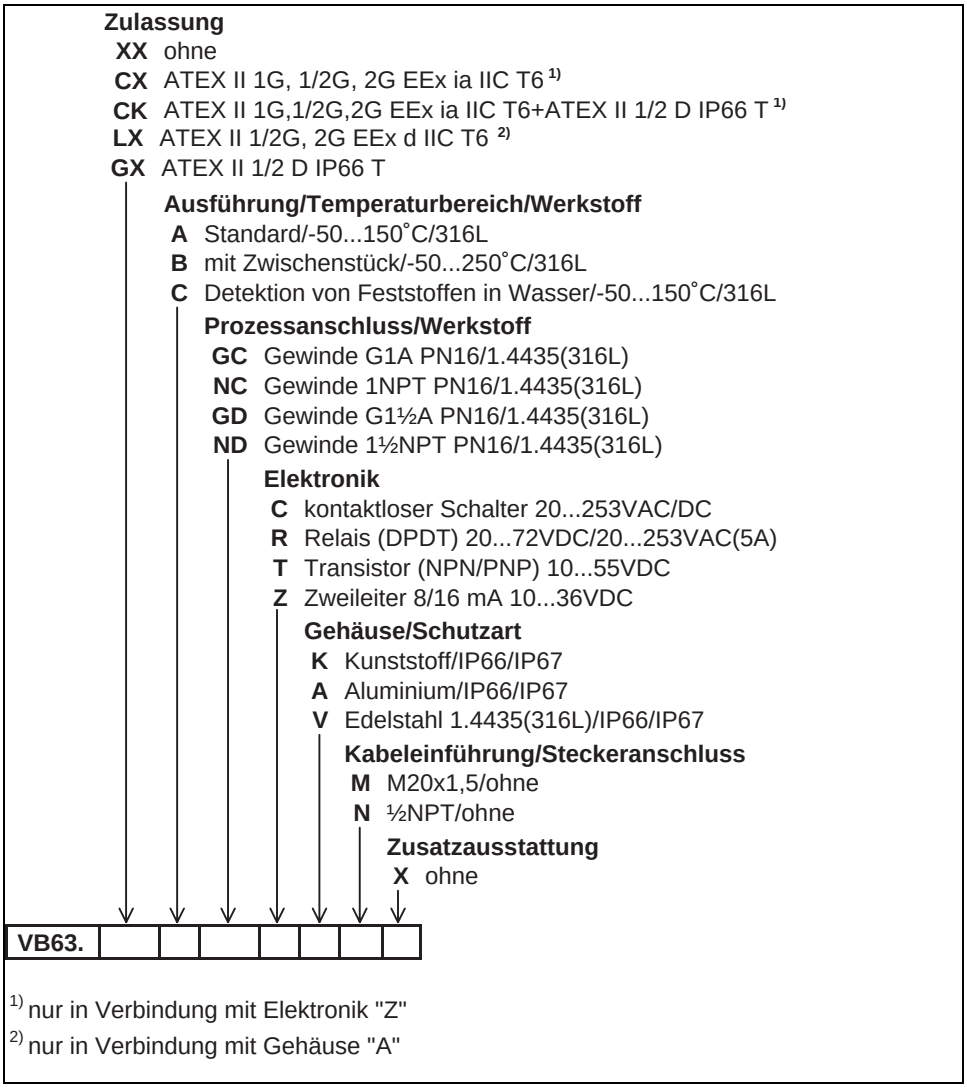

Fig. 31: Excerpt of the product code

VEGAVIB 65

29438-EN-040728

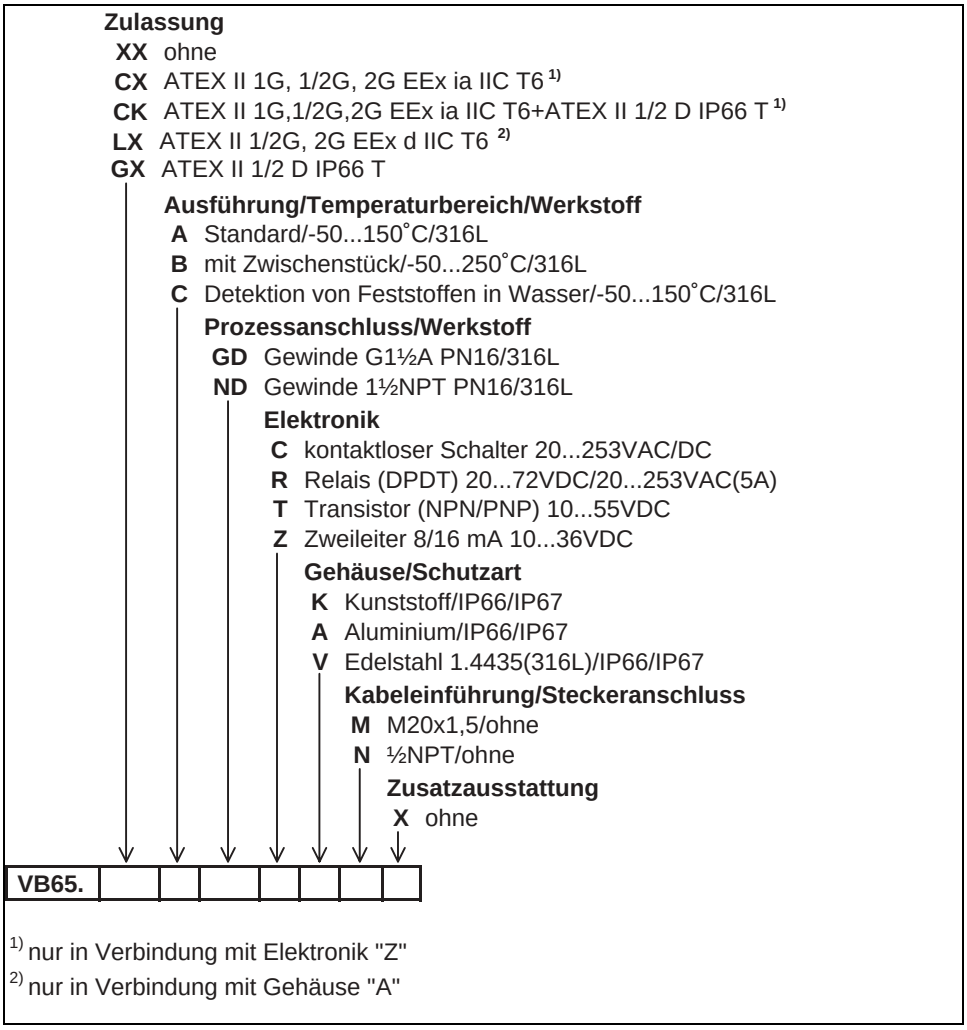

Fig. 32: Excerpt of the product code

VEGAVIB 66

29438-EN-040728

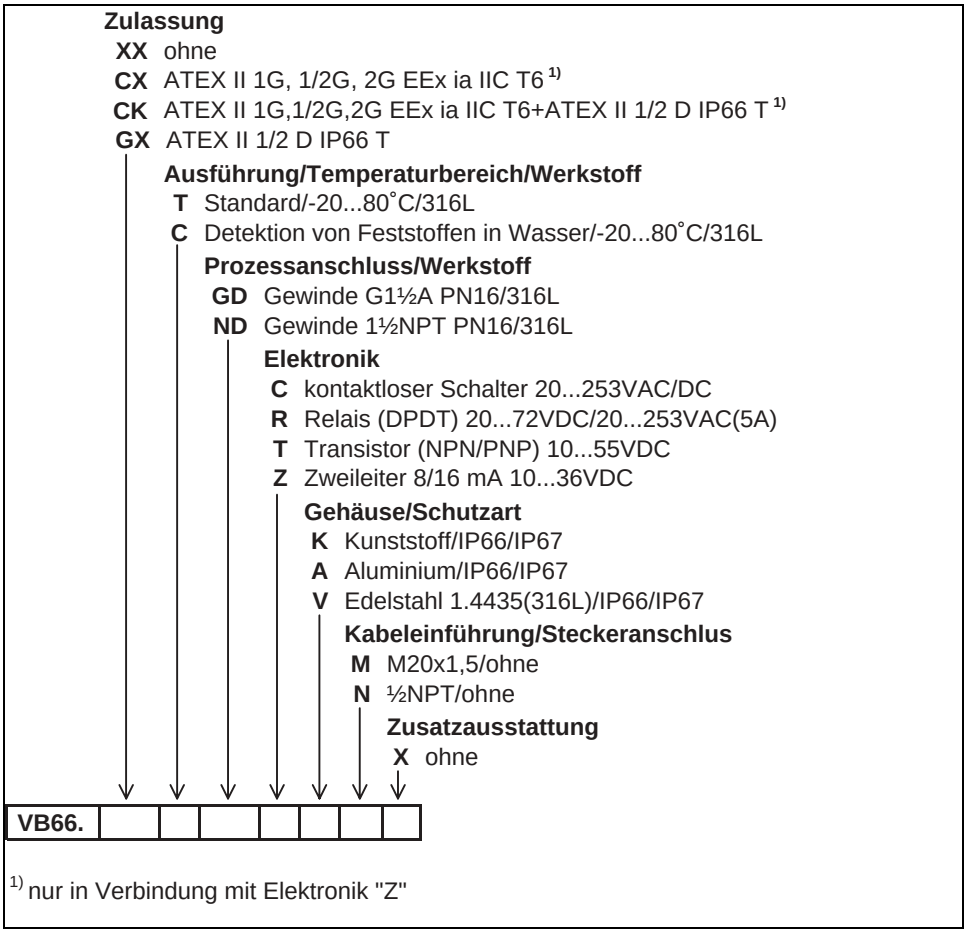

Fig. 33: Excerpt of the product code

VEGAVIB 67

29438-EN-040728

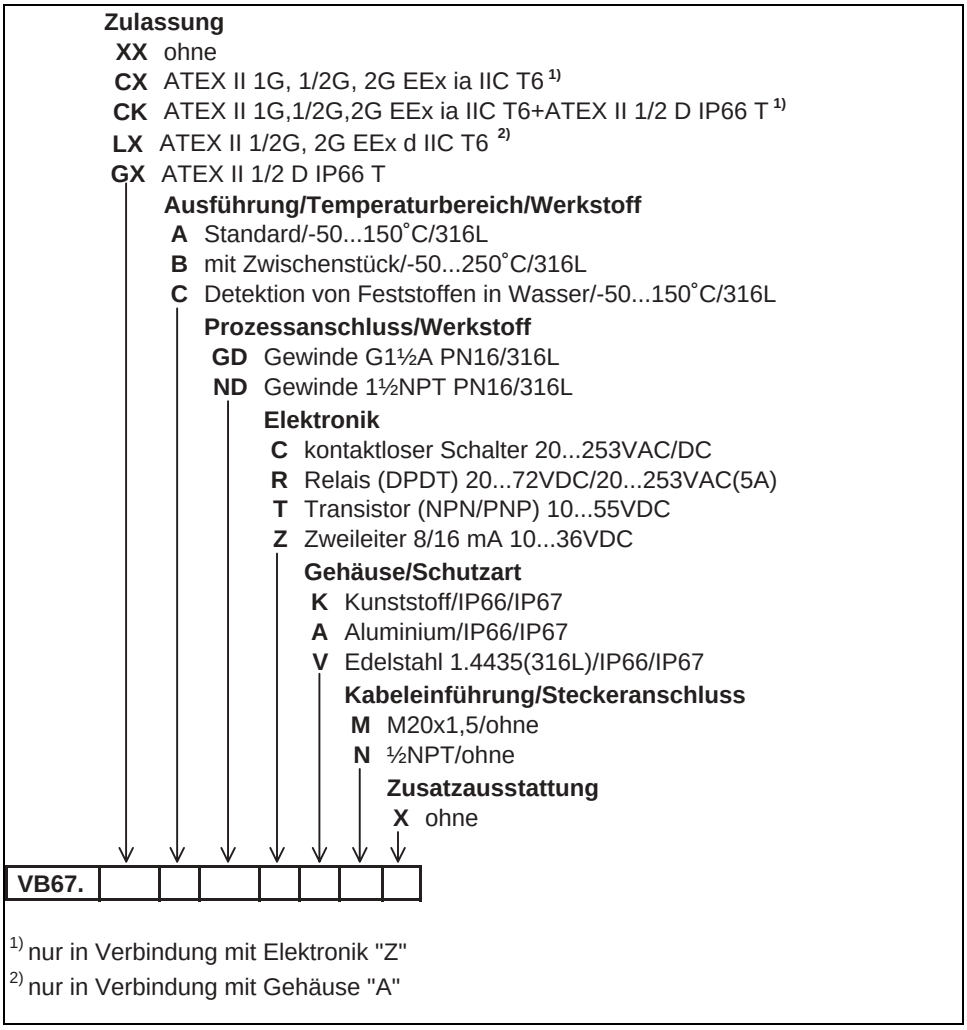

Fig. 34: Excerpt of the product code

29438-EN-040728

29438-EN-040728



VEGA Grieshaber KG
Am Hohenstein 113
77761 Schiltach
Germany
Phone +49 7836 50-0
Fax +49 7836 50-201
E-Mail: info@de.vega.com
www.vega.com

You can find at **www.vega.com** downloads of the following

- operating instructions manuals
- menu schematics
- software
- certificates
- approvals

and much, much more

29438-EN-040728