User Guide – Basic Functionality IM/CM/B–EN Rev. K

# ControlMaster CM10, CM30 and CM50
# Universal process controllers, 1/8, 1/4 and 1/2 DIN




Power and productivity
for a better world™

## The Company

We are an established world force in the design and manufacture of instrumentation for industrial process control, flow measurement, gas and liquid analysis and environmental applications.

As a part of ABB, a world leader in process automation technology, we offer customers application expertise, service and support worldwide.

We are committed to teamwork, high quality manufacturing, advanced technology and unrivalled service and support.

The quality, accuracy and performance of the Company's products result from over 100 years experience, combined with a continuous program of innovative design and development to incorporate the latest technology.

**Basic Level**

Refer to Section 6, page 28

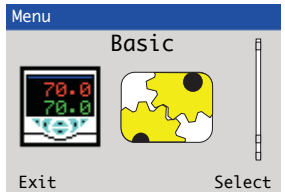


- Loop 1 Setpoints
  - Local Setpoint 1 (4)
  - RSP Ratio
  - RSP Bias
  - Ramp Mode
  - Ramp Rate
- Loop 1 Control
  - On/Off Hysteresis
  - Mode
  - Autotune
  - PID
- Loop 1 Time Prop
  - Cycle Time 1
  - Cycle Time 2
- Alarm 1 (8)
  - Trip

***Advanced Level …**

Refer to Section 7.1, page 35

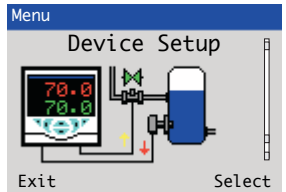


- Initial Setup
  - App. Template
  - Loop 1 Output Type
  - Loop 1 Split O/P
  - Instrument Tag
  - Mains Freq.
  - Config Action
  - Reset to Defaults
- Security Setup
  - Basic Password
  - Advanced Password
  - Reset Passwords

Refer to Section 7.2, page 38

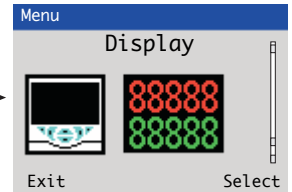


- Language
- Operator Templates
  - Page 1 (4) Template
- Operator Functions
  - Autoscroll
  - Soft Key Function
  - Auto Manual Enable
  - Local Remote Enable
  - Alarm Ack. Enable
  - SP Adjust Enable
- Settings
  - Brightness
  - Contrast**

Refer to Section 7.3, page 41

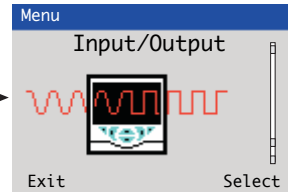


- Analog Inputs
  - Anlg Input 1 (4)
- Analog Outputs
  - Analog Output 1 (2)
- Digital I/O
  - Digital IO 1 (6)
- Relays
  - Relay 1 (4)

Refer to Section 7.4, page 49

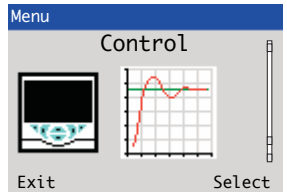


- Loop 1 Setpoints
  - Low Limit
  - High Limit
  - No. of Local SP's
  - Local Setpoint 1
  - Track Mode
  - RSP Ratio
  - RSP Bias
  - RSP Fault Action
  - Default Setpoint
  - Ramp Mode
  - Ramp Rate
  - Select Sources
- Loop 1 Control
  - Control Type
  - Control Action
  - On/Off Hysteresis
  - Autotune
  - PID
- Loop 1 Output
  - Limits
  - Failure Actions
  - A/M Select Sources
  - Slew Rate
- Loop 1 Split O/P
  - Min Input 1
  - Min OP 1
  - Max Input 1
  - Max OP 1
  - Min Input 2
  - Min OP 2
  - Max Input 2
  - Max OP 2
- Loop 1 Time Prop
  - Cycle Time 1
  - Cycle Time 2

See Back Cover

*When in Advanced Level (configuration) mode, press and hold the ↰ key to return to the standard Operator page – see Fig. 3.1, page 6

**Enabled for CM30 and CM50 only

## Contents

**1 Safety ..... 3**
1.1 Electrical Safety ..... 3
1.2 Symbols ..... 3
1.3 Health & Safety ..... 4

**2 Introduction ..... 5**
2.1 EC Directive 89/336/EEC ..... 5
2.2 End of Life Disposal ..... 5

**3 Displays, Overview ..... 6**
3.1 CM10 Operator Page, Icons & Keys ..... 6
3.2 CM30 and CM50 Operator Page, Icons & Keys .... 7

**4 Installation ..... 9**
4.1 Siting and Environmental Requirements ..... 9
4.2 Dimensions ..... 10
4.3 Mounting ..... 12
4.4 Jumper Links for Relay Outputs ..... 13
4.4.1 Removing the Controller from its Case ..... 13
4.4.2 Resetting Jumper Links ..... 14
4.5 Electrical Connections ..... 15
4.5.1 ControlMaster CM10 Electrical Connections ..... 16
4.5.2 ControlMaster CM30 Electrical Connections ..... 17
4.5.3 ControlMaster CM50 Electrical Connections ..... 18
4.5.4 Analog Inputs ..... 19
4.5.5 Frequency / Pulse Input ..... 21
4.5.6 Digital Input / Output ..... 21

**5 Operator Level Menus ..... 23**
5.1 Diagnostic Status Bar ..... 25
5.2 Diagnostic View ..... 26
5.3 Security Options ..... 26
5.4 Access Level ..... 27

**6 Basic Level ..... 28**

**7 Advanced Level ..... 35**
7.1 Device Setup ..... 35
7.2 Display ..... 38
7.3 Input/Output ..... 41
7.4 Control ..... 49
7.5 Process Alarm ..... 61
7.6 Communication ..... 63
7.7 Diagnostics ..... 64
7.7.1 Diagnostic Messages ..... 66
7.8 Device Info ..... 70

**8 Templates and Functionality ..... 71**
8.1 Single Loop / Single Loop with Remote Setpoint . 71

**9 PC Configuration ..... 72**

**10 Specification ..... 73**

**Appendix A – Digital and Analog Sources ..... 80**
A.1 Digital Sources ..... 80
A.2 Analog Sources ..... 80

**Appendix B – Configuration Error Codes ..... 81**

**Appendix C – Analog Input (Engineering) Units ..... 84**

**Appendix D – Output Type Assignments ..... 86**

# 1 Safety

Information in this manual is intended only to assist our customers in the efficient operation of our equipment. Use of this manual for any other purpose is specifically prohibited and its contents are not to be reproduced in full or part without prior approval of the Technical Publications Department.

## 1.1 Electrical Safety

This equipment complies with the requirements of CEI/IEC 61010-1:2001-2 'Safety Requirements for Electrical Equipment for Measurement, Control and Laboratory Use' and complies with US NEC 500, NIST and OSHA.

If the equipment is used in a manner NOT specified by the Company, the protection provided by the equipment may be impaired.

## 1.2 Symbols

One or more of the following symbols may appear on the equipment labelling:

| | |
|---|---|
|  | **Warning** – Refer to the manual for instructions |
|  | **Caution** – Risk of electric shock |
|  | Functional earth (ground) terminal |
|  | Protective earth (ground) terminal |
|  | Direct current supply only |
|  | Alternating current supply only |
|  | Both direct and alternating current supply |
|  | The equipment is protected through double insulation |

## 1.3 Health & Safety

**Health and Safety**

To ensure that our products are safe and without risk to health, the following points must be noted:

- The relevant sections of these instructions must be read carefully before proceeding.
- Warning labels on containers and packages must be observed.
- Installation, operation, maintenance and servicing must be carried out only by suitably trained personnel and in accordance with the information given.
- Normal safety precautions must be taken to avoid the possibility of an accident occurring when operating in conditions of high pressure and / or temperature.

Safety advice concerning the use of the equipment described in this manual or any relevant hazard data sheets (where applicable) may be obtained from the Company, together with servicing and spares information.

# 2 Introduction

This manual provides details for the ControlMaster CM10 (1/8 DIN), CM30 (1/4 DIN) and CM50 (1/2 DIN) controllers with Basic functionality.

**Note.**

- Read all relevant sections of this guide before configuring the system or modifying system parameters.
- Install and use associated equipment in accordance with the relevant national and local standards.
- System configuration must be carried out only by users or personnel with approved access rights (user privileges).

## 2.1 EC Directive 89/336/EEC

In order to meet the requirements of the EC Directive 89/336/EEC for EMC regulations, this product must not be used in a non-industrial environment.

## 2.2 End of Life Disposal

Controllers with Basic functionality do not contain any substance that causes undue harm to the environment and must be disposed of in accordance with the Directive on Waste Electrical and Electronic Equipment (WEEE). They must not be disposed of in Municipal Waste Collection.

# 3 Displays, Overview

## 3.1 CM10 Operator Page, Icons & Keys

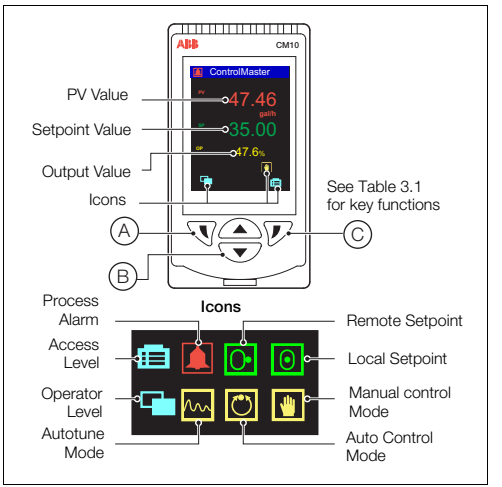


*Fig. 3.1 ControlMaster CM10 Display and Icons*

| | |
|---|---|
| Ⓐ | Navigation (left) / *Operator Level* access key – see page 23. |
| Ⓑ | Up / Down keys – highlight menu items and increase / decrease displayed values. |
| Ⓒ | Navigation key (right) / programmable *Soft Key* – see page 39. |

*Table 3.1 CM10 Front Panel Key Functions*

**Note.** When a *Soft Key* option is assigned to key Ⓒ, the *Advanced Level* (see page 35) must be accessed using the *Operator Level* access key Ⓐ.

## 3.2 CM30 and CM50 Operator Page, Icons & Keys

The ControlMaster CM30 and CM50 displays and icons are shown in Fig. 3.2.

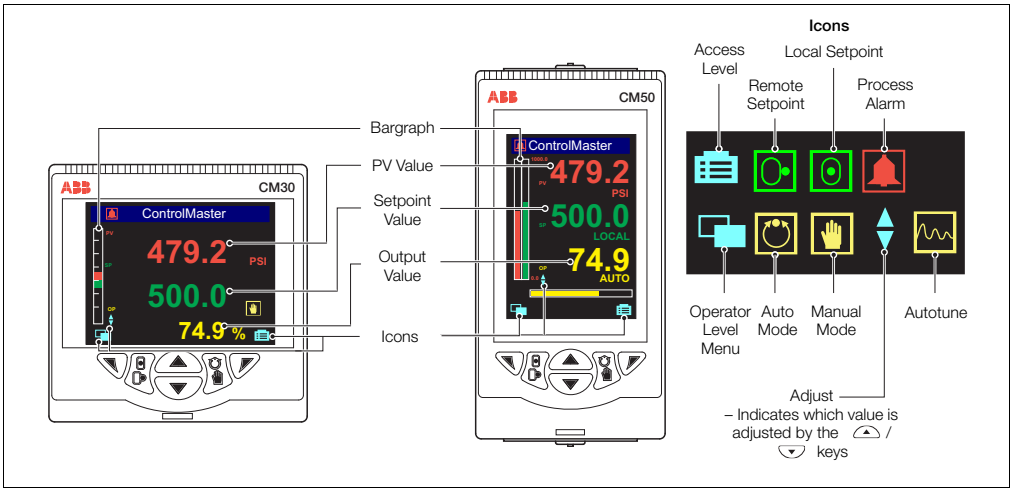


*Fig. 3.2 ControlMaster CM30 and CM50 Displays and Icons*

The ControlMaster CM30 and CM50 front panel keys are shown in Fig. 3.3.

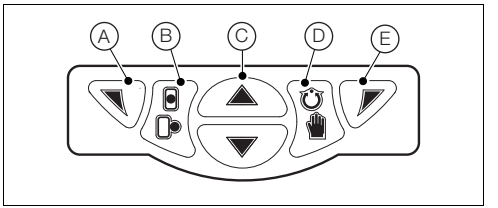


*Fig. 3.3 ControlMaster CM30 and CM50 Front Panel Keys*

| | |
|---|---|
| (A) | Navigation (left) / *Operator Level* access key – see page 23. |
| (B) | Local / Remote setpoint mode selection key. |
| (C) | Up / Down keys – navigate up / down menus and increase / decrease displayed values. |
| (D) | Auto / Manual control mode selection key. |
| (E) | Navigation key (right) / programmable *Soft Key* – see page *39*. |

*Table 3.2 CM30 / CM50 Front Panel Key Functions*

**Note.** When a *Soft Key* option is assigned to key (E), the *Advanced Level* (see page 35) must be accessed using the *Operator Level* access key (A).

# 4 Installation

## 4.1 Siting and Environmental Requirements

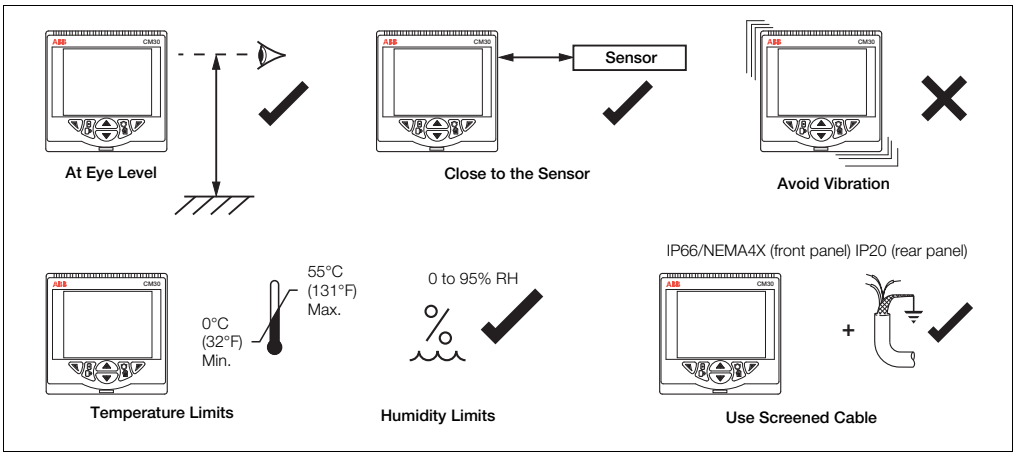


*Fig. 4.1 Siting and Environmental Requirements*

## 4.2 Dimensions

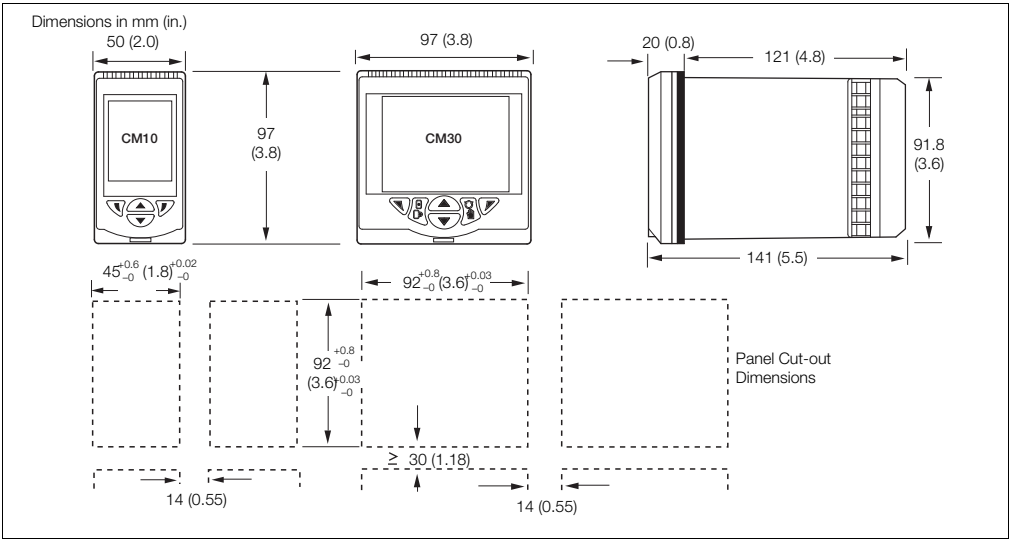


*Fig. 4.2 ControlMaster CM10 and CM30 Dimensions*

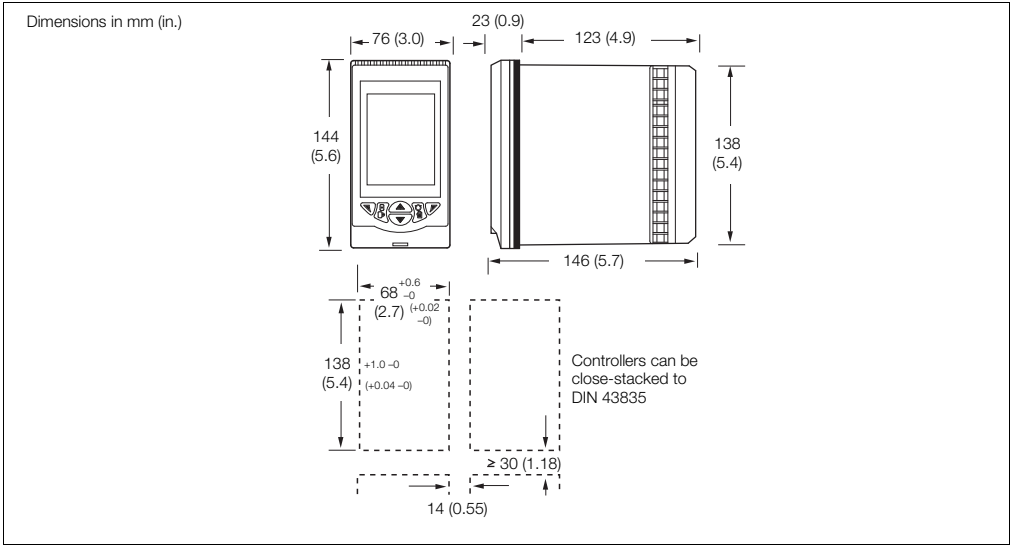


*Fig. 4.3 ControlMaster CM50 Dimensions*

## 4.3 Mounting

ControlMaster is designed for panel mounting. For NEMA4X protection, a panel thickness of 2.5 mm (0.1 in.) is required.

To panel-mount the controller:

1. Cut a hole of the correct size for the controller in the panel – see section 4.2, page 10 for dimensions.
2. Insert the controller into the panel cut-out.

Referring to Fig. 4.4:

3. Position the upper panel clamp (A) at the top front of the case against the panel.
4. Locate the panel clamp anchor (B) in slot (C).
5. Tighten the panel clamp anchor screw (D) until panel clamp (A) is secured against the panel.

> **Caution.** Do not overtighten the screw.

6. Repeat steps 3 to 5 to fit the lower panel clamp (E) and panel clamp anchor (F).

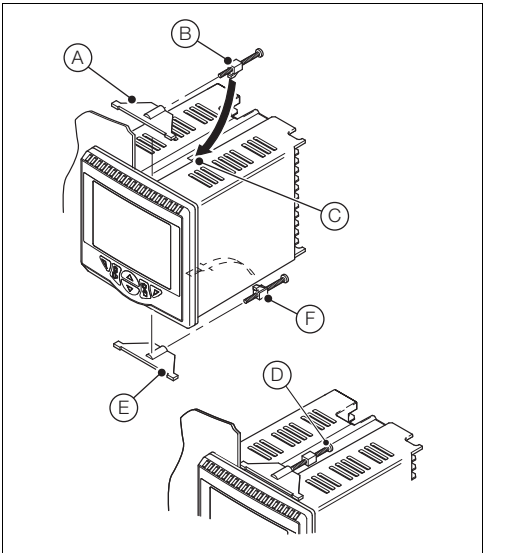


*Fig. 4.4 Mounting Details*

## 4.4 Jumper Links for Relay Outputs

The factory-set default for relay action is N/O.

### 4.4.1 Removing the Controller from its Case

The ControlMaster inner assembly must be removed from its case to access the relay contact jumper links.

Referring to Fig. 4.5:

1. Insert the bezel release tool (A) (supplied) into the front panel slot (B) below the function keys.
2. Press the bezel release tool (A) fully in and then down (C) until the shoulder on the tool engages with the notch behind the controller front plate.
3. Pull the bezel release tool (A) to withdraw the inner assembly from the case (D).

**Note.** If the bezel release tool is mislaid, 2 small flat-headed screwdrivers (4 mm [0.15 in.]) can be used as alternative tools, one inserted into the front panel slot and the second for leverage in the notch on the underside of the controller front plate. The notch is the only area that can be used as a leverage point – do not attempt to lever the front panel from any other area.

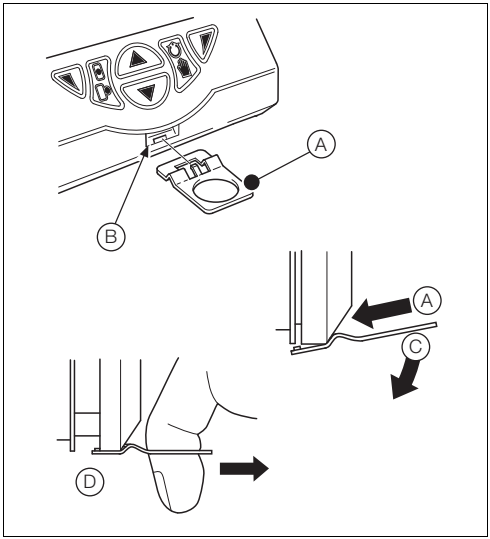


*Fig. 4.5 Removing the Controller from its Case*

### 4.4.2 Resetting Jumper Links

**Note.** The factory-set default for all jumper links is N/O.

1. The links associated with the relay outputs are shown in Fig. 4.6.
2. If necessary, move the link to select the relay action required (N/O or N/C).

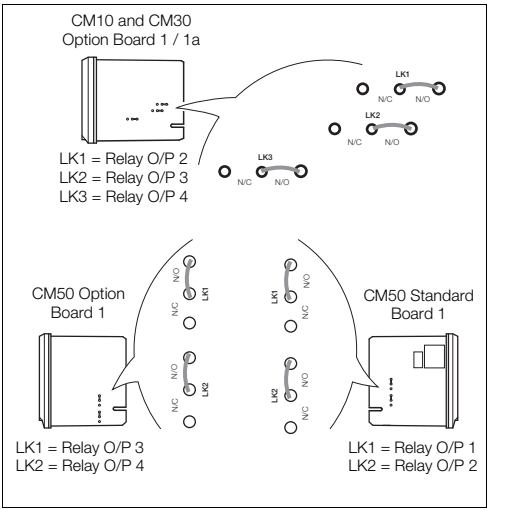


*Fig. 4.6 Jumper Links for Relay Outputs*

## 4.5 Electrical Connections

**Warning.**

- The instrument is not fitted with a switch therefore a disconnecting device such as a switch or circuit breaker conforming to local safety standards must be fitted to the final installation.
- It must be mounted in close proximity to the instrument within easy reach of the operator and must be marked clearly as the disconnection device for the instrument.
- Remove all power from supply, relay and any powered control circuits and high common mode voltages before accessing or making any connections.
- Use cable appropriate for the load currents. The terminals accept cables from 18 to 14 AWG (0.8 to 2.5mm$^2$).
- Always route signal leads and power cables separately, preferably in earthed (grounded) metal conduit.
- It is strongly recommended that screened cable is used for signal inputs and relay connections.
- The instrument conforms to Mains Power Input Overvoltage Category 2, Pollution Degree 2 (EN601010–1). (This equipment is protected through double insulation – Class II.)
- Analog / digital inputs and outputs, transmitter power supply and DC power supply are SELV (Safety Extra Low Voltage) circuits.
- All connections to secondary circuits must have basic insulation.
- After installation, there must be no access to live parts, e.g. terminals.
- Terminals for external circuits are for use only with equipment with no accessible live parts.
- If the instrument is used in a manner not specified by the Company, the protection provided by the equipment may be impaired.
- All equipment connected to the instrument's terminals must comply with local safety standards (IEC 60950, EN601010–1).

**Note.** Terminal screws must be tightened to a torque of 0.1 Nm (0.9 lbf/in.).

### 4.5.1 ControlMaster CM10 Electrical Connections

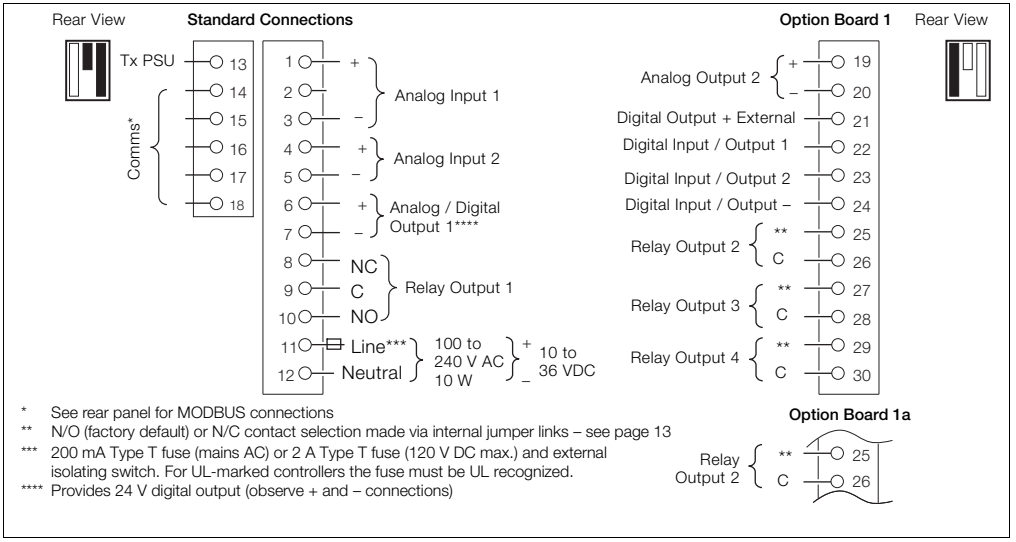


* See rear panel for MODBUS connections
** N/O (factory default) or N/C contact selection made via internal jumper links – see page 13
*** 200 mA Type T fuse (mains AC) or 2 A Type T fuse (120 V DC max.) and external isolating switch. For UL-marked controllers the fuse must be UL recognized.
**** Provides 24 V digital output (observe + and – connections)

*Fig. 4.7 ControlMaster CM10 Electrical Connections*

### 4.5.2 ControlMaster CM30 Electrical Connections

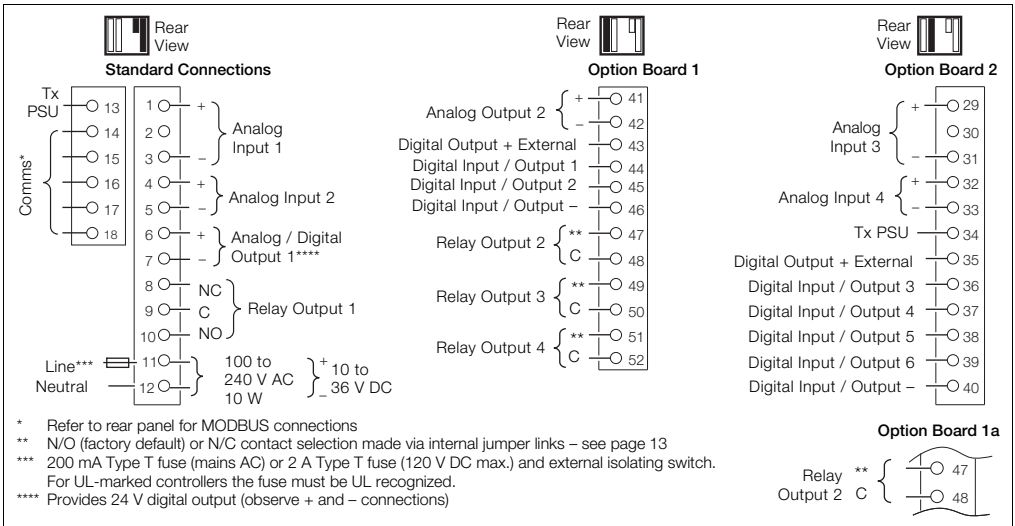


* Refer to rear panel for MODBUS connections
** N/O (factory default) or N/C contact selection made via internal jumper links – see page 13
*** 200 mA Type T fuse (mains AC) or 2 A Type T fuse (120 V DC max.) and external isolating switch. For UL-marked controllers the fuse must be UL recognized.
**** Provides 24 V digital output (observe + and – connections)

*Fig. 4.8 ControlMaster CM30 Electrical Connections*

### 4.5.3 ControlMaster CM50 Electrical Connections

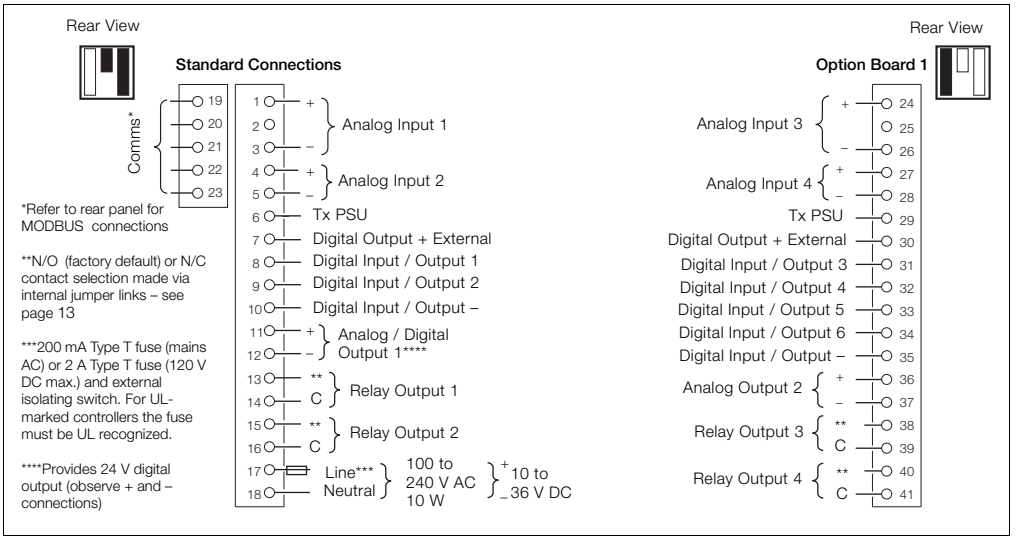


*Fig. 4.9 ControlMaster CM50 Electrical Connections*

### 4.5.4 Analog Inputs

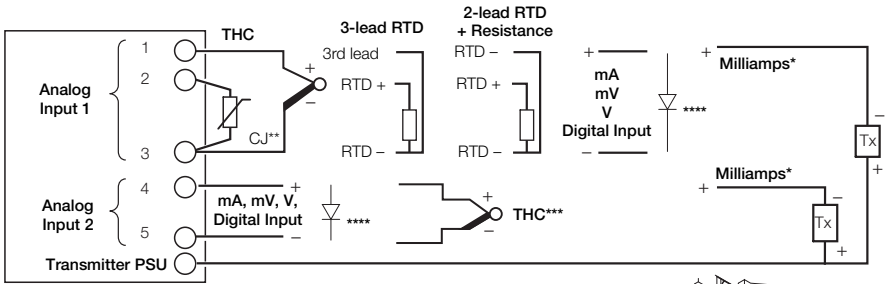


* Using internal transmitter power supply.

** Fit the CJ sensor supplied if Analog Input 1 or 2 are THC inputs.
(Alternatively, it is possible to use an external fixed cold [reference] junction, if the controller is programmed for use with millivolt inputs and the appropriate thermocouple linearizer is selected.)

*** Analog Input 2 can be used only with THC inputs if Analog Input 1 is also used as a THC input.

**** For mA input types, to ensure loop continuity when the controller is switched off, fit a suitably rated diode (for example, type 1N4148 or equivalent) as shown.

**Note.** 3-lead RTD: 3 leads must have equal resistance, not exceeding 20 Ω each.

*Fig. 4.10 Standard Analog Inputs (1 and 2)*

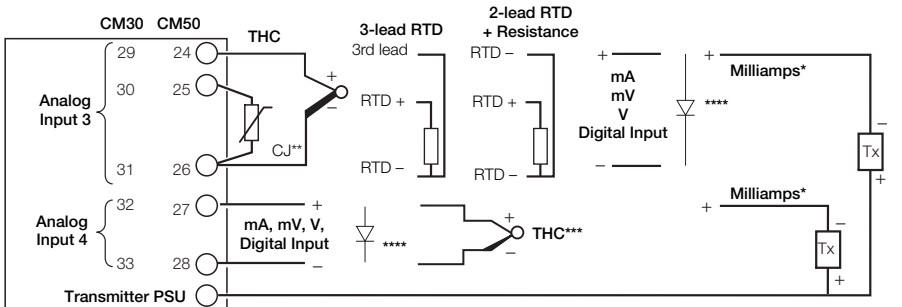


* Using internal transmitter power supply.

** Fit the CJ sensor supplied if Analog Inputs 3 or 4 are THC inputs.
(Alternatively, it is possible to use an external fixed cold [reference] junction, if the controller is programmed for use with millivolt inputs and the appropriate thermocouple linearizer is selected.)

*** Analog Input 4 can be used only with THC inputs if Analog Input 3 is also used as a THC input.

**** For mA input types, to ensure loop continuity when the controller is switched off, fit a suitably rated diode (for example, type 1N4148 or equivalent) as shown.

**Note**.3 Leads must have equal resistance, not exceeding 20 W each.

*Fig. 4.11 ControlMaster CM30 and CM50 Optional Analog Inputs (3 and 4)*

### 4.5.5 Frequency / Pulse Input

**Note.** This input is designed primarily for use with flowmeters.

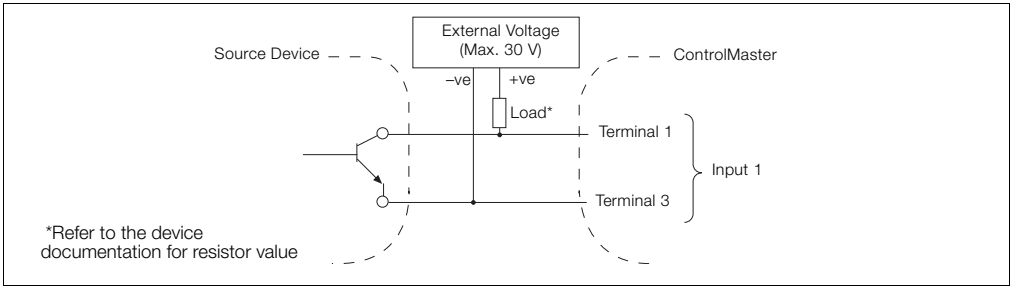


*Fig. 4.12 Frequency / Pulse Input*

### 4.5.6 Digital Input / Output

**Note.** Digital input and open collector digital output connections are shown in Fig. 4.13 – see page 80 for Digital Input / Output type options.

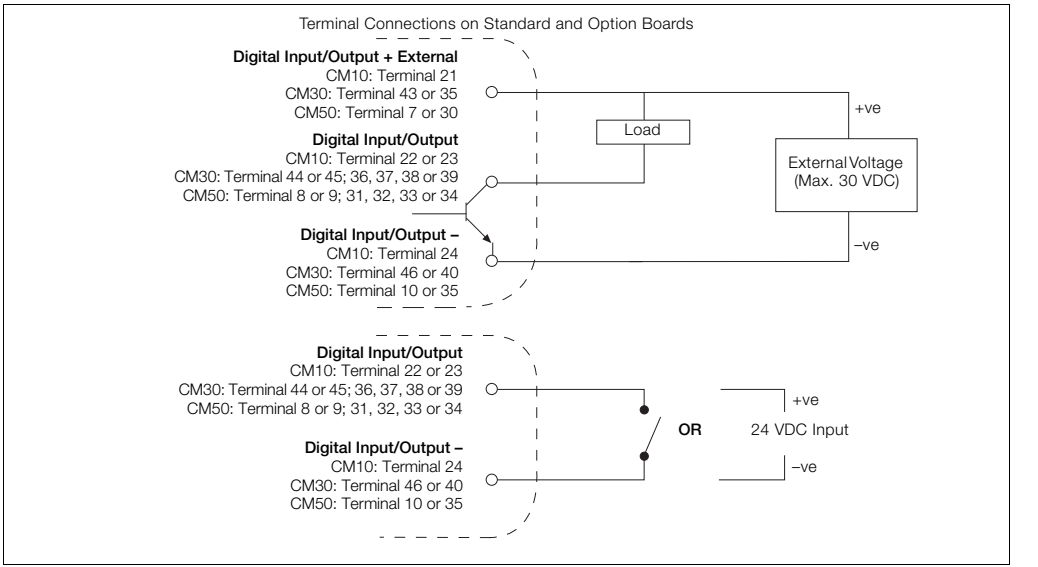


*Fig. 4.13 Digital Input and Open Collector Digital Output Connections*

# 5 Operator Level Menus

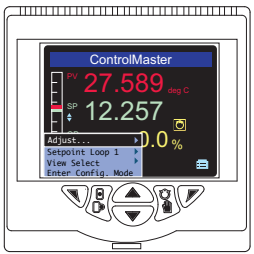


Operator level menus are used to adjust setpoint(s) and output(s), select setpoints, select the view and to enter *Basic* and *Advanced* modes (via the *Access* level) – see page 27.

To access Operator Level menus:

1. From the *Operator Page*, press ◥ to view the available menus.
2. Use the ▲ / ▼ keys to scroll through the menus and menu options.
3. Press ◢ to expand menu levels and to select menu options or press ◥ to return to the previous menu.

Menu functions are described in Table 5.1 page 24.

| | |
|---|---|
| **Autotune** | Used to start or stop an *Autotune* routine. This menu is enabled only if *Autotune* mode is *On* – see page 30. |
| **Adjust** | Enables a value to be adjusted using the ▲ / ▼ keys.<br>The ▲▼ icon next to a value indicates the current adjustable selection. |
| **Setpoint Select** | Selects the local setpoint to be used (displayed only if more than 1 local setpoint is configured). |
| **Alarm Acknowledge** | Acknowledges any active but unacknowledged alarms. |
| **View Select** | Selects the *Operator* view to be displayed. |
| **Enter Advanced Level** | Displays the *Access Level* selection views – see section 5.4, page 27 for security options. |

*Table 5.1 Operator Level Menu Functions*

## 5.1 Diagnostic Status Bar

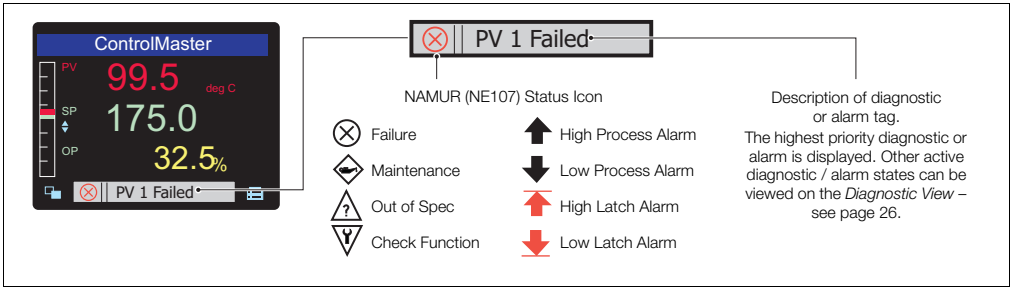


*Fig. 5.1 ControlMaster Diagnostic Status Bar (ControlMaster CM30 Shown)*

## 5.2 Diagnostic View

The *Diagnostic View* can be selected from the *Operator / View Select* menu. All currently active diagnostic alarm states are displayed in the *Diagnostic View*.

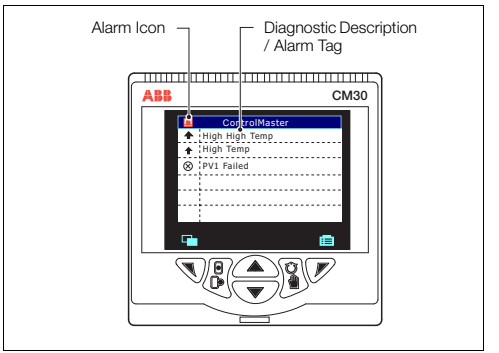


*Fig. 5.2 ControlMaster Diagnostic View (ControlMaster CM30 Shown)*

## 5.3 Security Options

Passwords can be set to enable secure end-user access at 2 levels: *Basic* and *Advanced*. A *Service* level is also listed, this is password-protected at the factory and reserved for factory use only.

Passwords are set, changed or restored to their default settings at the *Device Setup / Security Setup* parameter – see page 37.

**Note.** When the controller is powered-up for the first time the *Basic* and *Advanced* level levels can be accessed without password protection. Protected access to these levels must be allocated on-site as required.

## 5.4 Access Level

| Level | Access |
|---|---|
| Logout | Displayed after *Basic* or *Advanced* level are accessed. Logs the user out of *Basic* or *Advanced* level. If passwords are set, a password must be entered to access these levels again after selecting *Logout*. |
| Read Only | Enables all parameter settings to be viewed as read-only parameters. |
| Basic | Enables access to the *Basic* level and adjustment of *PID* parameters, autotuning configuration and adjustment of alarm trip points. |
| Advanced | Enables configuration access to all parameters. |
| Service | Reserved for use by authorized service personnel. |

*Table 5.2 Access Levels*

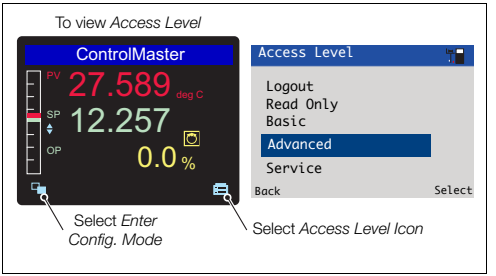


*Fig. 5.3 Access Level*

**Note.** A 5-minute time-out period enables a user to return to the *Operator* page and re-access the previous menu (displayed at exit) without re-entering the password. For periods over 5-minutes (or if *Logout* is selected), a password must be re-entered to access protected levels.

# 6 Basic Level

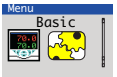


The *Basic* menu provides access to the tunable control settings and setpoint values.

| Loop 1 Setpoints | |
|---|---|
| Local Setpoint 1(4) | The local setpoint value required. If this value is adjusted in the *Operator Level* (see page 23) its value here is also updated. |
| RSP Ratio | If the remote (external) setpoint is selected, the control setpoint value is (ratio x remote setpoint input) + bias. |
| RSP Bias | Sets the remote setpoint bias in engineering units.<br>**Note**. This parameter is available only if template selected has remote setpoint or ratio functionality – see Section 8, page 71. |

...Basic / ...Loop 1 Setpoints

| | |
|---|---|
| Ramp Mode | The ramping setpoint facility can be used to prevent a large disturbance to the control output when the setpoint value is changed. The rate set applies to both the local and the remote setpoints. |

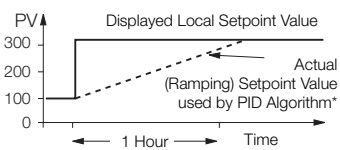


*Example: Ramp Rate = 200 Increments / hr

| | |
|---|---|
| Ramp Rate | Sets the ramp rate required in engineering units / hour.<br>**Note**. Applicable only if Ramp Mode is On. |
| **Loop 1 Control** | |
| On / Off Hysteresis | Sets the hysteresis value in engineering units. |

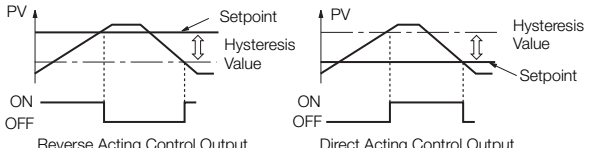


**Note**. Applicable only if Control Type is On / Off – see page 53.

...Basic / ...Loop 1 Control

| | |
|---|---|
| Mode | Turns the *Autotune* functionality on or off. When set to *On*, an *Autotune* can be started from the Operator level menus – see page 23. |
| Autotune | **Note**. Autotune is enabled only if the control type is PID – see page *32*. |

*Autotune* is a user-activated feature that enables automatic setting of the controller *PID* parameters using an 'at setpoint' type algorithm. *Autotune* changes the controller output and then monitors the process response to calculate the optimum *PID* settings. *Autotune* uses a relay type function with hysteresis that initiates a controlled oscillation in the process. New *PID* parameters are calculated and stored in the controller automatically.

**Note**. To achieve the best results from Autotune, switch the controller to Manual control mode (see page 6) and adjust the output until the PV is stable (close to the normal setpoint) before initiating Autotune.

...Basic / ...Loop 1 Control / ...Autotune

**Autotune Operation**

The *Autotune* sequence is shown in the following figure:

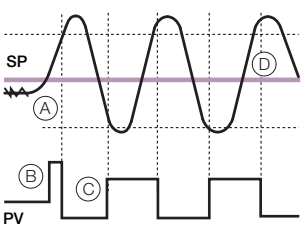


1. Set the first step value and dynamics required. For best results, select the largest initial output step size that can be tolerated by the process.
2. *Autotune* is enabled only if the control type is *PID*.
3. Start *Autotune* from the *Operator* menu.
4. Monitors a noise (A) and calculates a hysteresis value.
5. User-defined initial step in the output (B). When the process exceeds the hysteresis value the output is stepped down.
6. Adjusts output amplitude automatically (C) so PV disturbance is kept to minimum required.
7. When consistent oscillation is established (D), the *Autotune* process stops. Optimum settings are calculated from the process dynamics monitored.

...Basic / ...Loop 1 Control / ...Autotune

| | |
|---|---|
| First Step | Defines the maximum size of the first output step in the autotuning process. *Autotune* adjusts the output step magnitude according to the process noise and response to provide a reliable measurement of the process characteristics with the minimum disturbance of the process. The maximum setting provides the largest output step possible from the current output value. |
| Dynamics | Used to configure *Autotune* to give optimum results according to the type of process being controlled. |
| *Normal* | Determines if derivative control is required automatically and calculates the control settings accordingly. |
| *Deadtime* | Sets the proportional and integral terms to give optimum control for the deadtime process (higher proportional band [lower gain] and shorter integration time). |
| *PI* | Used for processes where it is known that derivative control is not required. |
| Reset | If the controller is transferred to another process or duty, *Autotune* must be reset. The current *PID* (see page 32) settings are retained but the internal process data is cleared ready for a completely new process with different characteristics. |
| PID | The controller's *PID* (proportional, integral and derivative control) settings can be commissioned using the *Autotune* (see page 30) function and / or they can be adjusted manually. |
| Proportional Band 1 | Set as % of engineering range. |
| Integral Time 1 | Set in seconds per repeat. To turn integral action off, set to 0 or 10000 s. |
| Derivative Time 1 | Set in seconds. |

...Basic / ...Loop 1 Control / ...PID

| | |
|---|---|
| Manual Reset | When the *Integral Time* is *Off,* the manual reset parameter is activated. When the process variable is equal to the control setpoint, the output value is equal to the manual reset value. |

**Note**: The controller is shipped with null PID values (P = 100, I = off & D = 0). To enable the controller to control the process it is connected to, these values must be tuned accordingly. This can be achieved via the AutoTune function or manual adjustment. If the controller is tuned manually the table below provides details of some suggested values to start from.

These values are only suggested starting values and should not be used as an alternative to proper tuning of the Controller.

| Process Type | P | I |
|---|---|---|
| Temperature (fast)* | 10 | 30 |
| Temperature (slow)* | 10 | 300 |
| Pressure (fast) | 100 | 1 |
| Pressure (slow) | 10 | 30 |
| Level (fast) | 100 | 1 |
| Level (slow) | 10 | 30 |
| Flow | 100 | 1 |

*For temperature loops, control performance can be improved via the use of Derivative.
A suggested starting value is $1/6^{th}$ of the Integral value.

...Basic

| | |
|---|---|
| **Loop 1 Time Prop** | The active time of the output pulse is proportional to the value of the control output. With 100% output the pulse is active for the complete cycle time, for example:<br>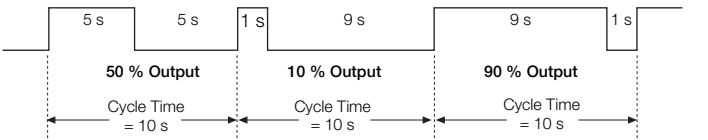<br><br>**Note**. Applicable only if Output Type is Time Prop or Split Output (and one output is a relay or a digital output) – see page 35. |
| Cycle Time 1(2) | The cycle time to be used with time proportioning outputs.<br>For split outputs, the *Cycle Time 1* setting applies to *Output 1* and *Cycle Time 2* setting applies to *Output 2* – see page 35. |
| **Alarm 1 (8)** | |
| Trip | The alarm trip level in engineering units – see *Process Alarm* (page 62) for parameter details. |

# 7 Advanced Level

## 7.1 Device Setup

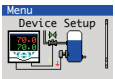


Provides access to standard setup parameters to determine the type of control / indication required. Also provides the ability to create non-standard configurations for special application requirements.

| Initial Setup | |
|---|---|
| App Template | Application templates enable configurations for particular applications to be created as simply as possible. Select the appropriate template before configuring any other parameters. When a template is selected, the Controller assumes the preset form for that template. The inputs and function blocks are soft-wired automatically to perform the selected function.<br>**Note**. See Section 8, page 71 for templates available to ControlMasters with Basic functionality. |
| Loop 1 Output Type | The appropriate output function block, relay, digital and analog outputs are configured and soft wired – see Appendix D, page 86 for output assignments. |

...Device Setup / ...Basic Setup

| | |
|---|---|
| Loop 1 Split O/P | These types of outputs split the *Control (PID)* output signal (see page 32) into 2 signals. The linear relationship between the PID output and the 2 outputs can be configured in the control configuration. |
| Instrument Tag | A 16-character alphanumeric tag, displayed on *Operator* pages. |
| Mains Freq | Used to set the internal filters to reduce mains power frequency interference. |
| Config Action | The *Config Action* parameter is used to determine how the controller and controller outputs behave when the *Advanced* level is entered – see page 35. |
| *Continue* | The controller continues to operate as in Operator level. Outputs continue to operate as normal. |
| *Hold* | Puts the controller into *Manual* control mode. When the *Configuration* level is exited, the controller returns to the pre-*Configuration* mode of operation. Digital, relay and analog outputs are held at their value / state when *Configuration* mode is entered. |
| *Inactive* | Puts the controller into *Manual* control mode. When the *Advanced* level is exited, the controller returns to the pre-configuration mode of operation.<br>Digital and relay outputs are turned off. Analog outputs are set to 0 mA. |
| Reset to Defaults | Resets all configuration parameters to their default values. |

...Device Setup

| | |
|---|---|
| **Security Setup** | 2 Security access levels are provided, each protected by a password of up to 6 alphanumeric characters.<br>**Note**. Passwords are not set at the factory and must be entered by the end user(s). |
| Basic Password | *Basic* level provides access to the *Basic* level – see section 6, page 28. |
| Advanced Password | Provides access to all configuration parameters – see section 5.4, page 27. |
| Reset Passwords | Resets all passwords to factory values. |

## 7.2 Display

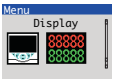


Used to setup the operator page, displayed language and display hardware settings.

| | |
|---|---|
| **Language** | Selects the language on the controller's local display. |
| **Operator Templates** | Enables up to 4 operator pages to be configured to suit the application requirements. |
| Page 1 (to 4) Template | The operator template type.<br>The functions available in each template type are displayed as abbreviations, for example:<br>*Single PV, SP & OP*<br>Key to abbreviations:<br>■ PV = process variable<br>■ SP = setpoint<br>■ OP = control output |

...Display

| | |
|---|---|
| **Operator Functions** | |
| Autoscroll | When enabled (*On*), operator pages are scrolled continuously at intervals of 10 seconds per page. |
| Soft Key Function | Assigns a dedicated function to the Navigation key (right) – see page 6. |
| *Configuration* | Displays the *Access Level* enabling selection of configuration levels. |
| *Auto / Manual* | Toggles between *Auto* and *Manual* control modes. |
| *Local / Remote* | Toggles between *Local* and *Remote* setpoint modes. |
| *Scroll View* | Scrolls through each available *Operator* view. |
| *Alarm Ack* | Acknowledges all active unacknowledged alarms. |
| *Toggle Signal* | Provides source that toggles between 2 states – can be assigned to outputs or used to select sources. |
| *Edge Signal* | Provides an edge-triggered source that is active on key press. Can be assigned to outputs or used to select sources |

...Display /...Operator Enable Functions

| | |
|---|---|
| Auto Manual Enable | Turns on / off the ability for *Auto* / *Manual* control mode to be changed in *Operator Level*. |
| Local Remote Enable | Turns on / off the ability for local / remote setpoint mode to be changed in *Operator Level*. |
| Alarm Ack. Enable | Turns on / off the ability to acknowledge alarms from the front panel. |
| SP Adjust Enable | Turns on / off setpoint adjustment in the *Operator Level*. |
| **Settings** | Adjusts display settings to suit ambient conditions. |
| Brightness | Increases / Decreases the display brightness to suit local environmental conditions. |
| Contrast | Increases / Decreases the display contrast to suit local environmental conditions (enabled for CM30 and CM50 only). |

## 7.3 Input/Output

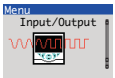


Allows analog and digital inputs / outputs and relays to be configured.

| **Analog Inputs** | |
|---|---|
| Analog Input 1(4)* | |
| Input Type | Input types comprise: *Millivolts, Milliamps, Volts, Resistance (Ohms), RTD, Thermocouple, Digital volt-free, 24V Digital, Freq. Input, Pulse Input*. |
| | Additional *Input Type* comments: |
| *Digital Volt Free* | Acts as a digital input. |
| *Freq. Input* | Sets the maximum frequency and equivalent flow rate in the engineering range 0 to 6 KHz. (A frequency up to 6 KHz can be used to create an analog value.) |
| *Pulse Input* | This parameter counts pulses and is recommended only for use with electromagnetic flowmeters. |

*Analog Inputs 2 to 4: *Freq Input*, *Pulse Input* and *Resistance* not available.
A *Thermocouple* input type can be set only if the first input is set to *Thermocouple*.

... Input/Output / ...Analog Input 1(4)

**Elect. Low**

Sets the required electrical range.

**Note**. Applicable only to Millivolts, Milliamps, Volts and Ohms.

| Linear Inputs | Standard Analog Input | Accuracy (% of Reading) |
|---|---|---|
| Millivolts | 0 to 150 mV | 0.1 % or ±20 µV |
| Milliamps | 0 to 50 mA | 0.2 % or ±4 µV |
| Volts | 0 to 25 V | 0.2 % or ±1 mV |
| Resistance Ω (low) | 0 to 550 Ω | 0.2 % or ±0.1 Ω |
| Resistance Ω (high) | 0 to 10 kΩ | 0.1 % or ±0.5 Ω |

**Elect. High**

Sets the required electrical range.

**Note**. Applicable only to Millivolts, Milliamps, Volts and Freq. Input.

**Linearizer**

Selects the linearizer type required to condition the input signal.

**Notes**. For thermocouple applications using an external fixed cold junction, set Input Type to Millivolts (see page 41) and select the appropriate linearizer type.

Not applicable for *Pulse Input*, *Digital Volt Free*, *24Volt Digital* parameters – see page 41.

... Input/Output / ...Analog Input 1(4)

| | |
|---|---|
| Eng Units | The selected units are used by the linearizer and displayed in the *Operator* pages – see page 23.<br>Not applicable for *Pulse Input*, *Digital volt-free* or *24V Digital* parameters – see page 41.<br>*Thermocouple* and *RTD* inputs (see page 41) are restricted to *deg C*, *deg F*, *Kelvin* – see Appendix 84, page 84 for analog input units. |
| Eng. Dps | Engineering decimal places – selects the resolution (decimal places) displayed for the input value. |
| Eng. Low<br>Eng. High | Specifies the engineering low (minimum) / high (maximum) value.<br>For example, for an electrical input range of 4.0 to 20.0 mA, representing a pressure range of 50 to 250 bar (725 to 2630 psi), set the *Eng Low* value to 50.0 and the *Eng High* value to 250.0.<br>Not applicable for *Pulse Input*, *Digital volt-free* or *24V Digital* parameters – see page 41. |
| Pulse Units | Selects the unit of measure for the pulse input type. |
| Pulse / Unit | Sets the number of pulses required to represent 1 pulse unit (as set above). For example, if *Pulse Units* = Kl and *Pulse / Unit* = 10.00000000, each pulse represents 0.1 Kl, 10 pulses = 1 Kl. |

... Input/Output / ...Analog Input 1(4)

| | |
|---|---|
| Broken Sensor | If an input failure occurs, the input value can be configured to drive in a set direction. |
| *None* | No action taken. |
| *Automatic* | If the value of failed input is below *Eng Low* (see page *43*), the input value is driven to minimum downscale value; otherwise it is driven to the maximum upscale value. |
| *Upscale* | The input is driven to the maximum upscale value. |
| *Downscale* | The input is driven to the minimum downscale value. |
| Filter Time | The input is averaged over the time set. |
| Fault Detect | Sets a tolerance level (as a % of the engineering range) to allow for deviation of the input signal above or below the engineering range before an input failure is detected. |
| Zero Adjustment<br>Span Adjustment | The *Zero Adjustment* and *Span Adjustment* parameters enable fine tuning of the inputs to eliminate system errors. Apply a known input value and adjust until the required input value is displayed.<br>Normally, *Zero Adjustment* is used with input values close to *Eng Low* (adjustment is performed by applying an offset to the reading). and *Span Adjustment* is used with values close to *Eng High* (adjustment is performed by applying a multiplier to the reading). |

...Input/Output

| | |
|---|---|
| **Analog Outputs** | The analog outputs can be configured to retransmit any analog value and have a configurable range from 0 to 24 mA. Output 1 can also be configured to function as a digital output. |
| Analog Output 1(2) | **Note**. Analog Output 2 is available only if an option board is fitted – see pages 16 (CM10), 17 (CM30 and 17 (CM50). |
| Output Type | Selects the analog or digital output type required (applicable to Analog Output 1 only). |
| Source | Selects the parameter to be assigned to the output – see Appendix A, page 80 for description of sources. |
| Elect. Low* | The current output required when the source value is equal to the *Eng Low* value – see page 43. |
| Elect. High* | The current output required when the source value is equal to the *Eng High* value – see page 43. |

*Not applicable if *Output Type* is *Digital* or *Source* is *None*.

…Input/Output / …Analog Outputs / …Analog Output 1 (2)

| | |
|---|---|
| Auto Eng Range* | If enabled (*On*) the *Eng High* and *Eng Low* values for the output are set to the engineering range values of the source automatically. |
| Eng Low* | The minimum engineering range output value. |
| Eng High* | The maximum engineering range output value. |
| Polarity** | Sets the polarity of the output signal.<br>If set to *Negative*, the output is energized when source is inactive.<br>If set to *Positive*, the output is energized when source is active. |

*Not applicable if *Output Type* is *Digital* or *Source* is *None*.
**Not applicable if *Output Type* is *Analog* or *Source* is *None*.

...Input/Output

| | |
|---|---|
| **Digital I/O** | |
| Digital IO 1(to 6) | |
| Type | Sets the *Digital IO* to operate as an output or an input. |
| *Off* | No action taken. |
| *Output* | The *Digital IO* operates as an output. |
| *Volt Free* | High input detected when the volt-free switch across the input is closed. |
| *24 Volt* | Digital input low < 5V, high > 11V (maximum input 30 V). |
| *TTL* | Digital input low < 0.8V, high > 2V. |
| Output Source | Selects the digital signal to be assigned to the output – see Appendix A, page 80 for description of sources. |

…Input/Output / …Digital I/O / …Digital IO 1(to 6)

| | |
|---|---|
| Polarity | Sets the polarity of the output signal. |
| *Positive* | For an output, the output is high if the source is active.<br>For an input, the input is active if a high signal is detected. |
| *Negative* | For an output the output is high if the source is inactive.<br>For an input, the input is active if a low signal is detected. |
| **Relays** | |
| Relay 1 (to 4) | |
| Source | Selects the digital signal to be assigned to the relay – see Appendix A, page 80 for description of sources. |
| Polarity | Sets the polarity of the relay. |
| *Positive* | The relay is energized If the source is active. |
| *Negative* | The relay is energized If the source is inactive. |

## 7.4 Control

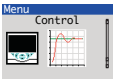


Enables the setpoints, control functions and outputs to be configured.

| | |
|---|---|
| **Loop 1 Setpoints** | The controller can configure independent local setpoint values, remote setpoint functionality and limit the absolute values and rate of change of the control setpoint. |
| Low Limit<br>High Limit | The setpoint *Low / High Limit* parameters define the maximum and minimum values for the local and / or remote setpoints. Setpoint limits do not apply in *Manual* control mode with local setpoint tracking enabled. If the setpoint is out of limits when *Auto* control mode is selected, the setpoint value can only be adjusted towards its limits. |
| No. of Local SP's | Selects the number of independent local (internal) setpoints required. Local setpoints can be selected from the *Operator* level menu or via a digital signal.<br>**Note**. 1, 2, 3, 4 Setpoints on CM30 and CM50 controllers. 1, 2 Setpoints on CM10 controllers. |
| Local Setpoint 1(4) | If the value is adjusted in the *Operator* level (see page 23), its value here is also updated. |

...Control / ...Loop 1 Setpoints

| | |
|---|---|
| Track Mode | The local (internal) setpoint can track another value according to the setpoint tracking mode selected. |
| *Off* | No tracking. |
| *Local* | The local (internal) setpoint tracks the process variable when *Manual* control mode is selected. |
| *Remote* | The local (internal) setpoint tracks the remote (external) setpoint when in *Remote Setpoint* mode. If the controller is put into *Manual* control mode the setpoint reverts from *Remote* to *Local*.<br>**Note**. Available only if the template selected has remote setpoint functionality. |
| *Local and Remote* | Available only if the template selected has remote setpoint functionality. |
| RSP Ratio | When the remote (external) setpoint is selected the control setpoint value is:<br>(ratio x remote setpoint input) + bias |
| RSP Bias | Sets the remote setpoint bias in engineering units – see Appendix A.2, page 80 for description of analog input units. |

...Control / ...Loop 1 Setpoints

| | |
|---|---|
| RSP Fault Action | The action required when a fault occurs with the remote setpoint. |
| *No Action* | No fault action. |
| *Local* | Selects the local (internal) setpoint mode. |
| *Local Default* | Selects the local (internal) setpoint mode and sets its value to the default setpoint. |
| Default Setpoint | Sets the value required for the local (internal) setpoint under remote setpoint fault conditions. |
| Ramp Mode | See *Basic* Level, page 28. |
| Ramp Rate | See *Basic* Level, page 28. |
| Select Sources | Selection of local setpoints and changing the setpoint mode (between local [internal] and remote [external]) can be controlled by digital signals, either from internal digital signals (for example, alarm states) or from external signals via digital inputs (or digital communications) – see Appendix A, page 80 for description of sources. |
| LSP 1/2 Toggle | The (level-triggered) source required to select either local setpoint 1 (LSP1) or local setpoint 2 (LSP2). A low signal locks the local setpoint as LSP1; a high signal locks it as LSP2. 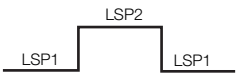  |

...Control / ...Loop 1 Setpoints / Select Sources

**LSP1 (to 4) Select**
The source required to select local setpoint 1 (LSP1) as the current local setpoint. Selection is made on the rising edge of the digital signal.

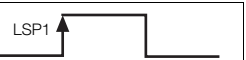


**Local Select**
The source required to select local setpoint 1 (LSP1) as the current local setpoint. Selection is made on the rising edge of the digital signal.




**Remote Select**
The source required to select remote setpoint mode.




**Loc/Rem Toggle**
The (level-triggered) source required to select either local or remote setpoint mode. This source is level-triggered.

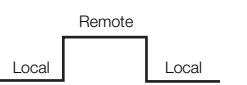


A low signal locks the controller in local setpoint mode and a high signal locks it in remote setpoint mode. The edge-triggered local and remote selection sources and the front panel keys do not operate when this function is used.

If the remote setpoint fails while selected using this digital selection and the *RSP Fault Action parameter* is not set to *No Action* (see page 51), the mode changes to *Local*.

As soon as the remote setpoint is no longer in a failed state it reverts to Remote mode (if it is still selected by this function).

...Control

| | |
|---|---|
| **Loop 1 Control** | Configures the basic type of control required and the *PID* (see page 32) and *Autotune* (see page 30) settings. |
| Control Type | Selects the basic type of controller required. |
| PID | Standard proportional, integral and derivative control. |
| On/Off | A simple 2-state control.<br>**Note**. Loop 1 output type must be set to Time Prop – see page 35. |
| Control Action | If the required controller action is known it can be set using this parameter. Otherwise it can be set to *Unknown* and *Autotune* (see page 30) determines and selects the correct action. |
| *Direct* | For applications where an increasing process variable requires an increasing output to control it. |
| *Reverse* | For applications where an increasing process variable requires a decreasing output to control it. |
| *Unknown* | For applications where the control action is not known (run *Autotune* to set the control action automatically). |
| On/Off Hysteresis | Refer to *Basic Level* / On / *Off Hysteresis* on page 29. |
| Autotune | Refer to *Basic Level / Autotune* on page 30. |
| PID | Refer to *Basic Level / PID* on page 32. |

...Control

| | |
|---|---|
| **Loop 1 Output** | Used to set the output limits, tracking rates, slew rates and output action on power failure or process variable failure. |
| Limits | **Note**. When used with split output the limits restrict the PID algorithm output (see page 32) before the split output range values are calculated. |
| Limit Action | Selects when the output limits should be applied (*Off, Auto + Manual, Auto Only*). |
| Low/High Limit | Set minimum / maximum controller output in %. |
| Failure Actions | |
| Power Recovery | Used to select the default power failure mode required following a power interruption or failure. |
| *Last Mode* | The last *Power Recovery* mode selected. |
| *Man – Last* | *Manual* control mode using the last output before power failure. |
| *Man – 0 %* | *Manual* control mode with output set to 0 %. |
| *Man – 100 %* | *Manual* control mode with output set to 100 %. |

…Control / …Loop 1 Output / …Failure Actions / …Power Recovery

| | |
|---|---|
| *Man – Default* | *Manual* control mode with output set to default value. |
| *Auto Mode* | *Auto* control mode with integral term reset. |
| *Auto – Last* | *Auto* control mode with integral term restored to its last value before the power failure. |
| **PV Fail Action** | Determines the controller output when the *PV* (process variable) input fails. |
| *No Action* | No action is taken if the *PV* input fails. |
| *Man – Hold O/P* | Puts the controller into *Manual* control mode and holds the output at its value immediately prior to the *PV* failure. |
| *Man – Default O/P* | Puts the controller into *Manual* control mode and sets the output to the default output value. |
| **Default Output** | This parameter is used in conjunction with *Power Recovery* (see page 54) and *PV Fail Action* settings (see above). For split outputs this value refers to the *PID* algorithm (see page 32) before the split range values are calculated. |

...Control / ...Loop 1 Output

| | |
|---|---|
| A/M Select Sources | The selection of A/M (*Auto* / *Manual*) control modes of operation can be controlled by digital signals; either from internal digital signals (for example, alarm states) or from external signals via digital inputs (or digital communications). |
| Auto Select | The source required to select *Auto* control mode. Selection is made on the rising edge of the digital signal. |
| Manual 1(2) Select | The source required to select *Auto* control mode. Selection is made on rising edge of the digital signal. The output value is set according to *Manual 1(2) Config O/P* (see below). |
| Manual 1(2) Output | Determines the *Manual* output value to be set when the controller is put into *Manual* control mode (see page 6) using *Manual 1(2) Select* source. |
| *Last Auto O/P* | Holds the output at its value prior to switching to *Manual* control mode. |
| *Man – 0%* | Sets the output to 0 %. |
| *Man – 100%* | Sets the output to 100 %. |
| *Config Value* | Sets the output to the value set in *Manual 2 Config O/P* – see page 57. |

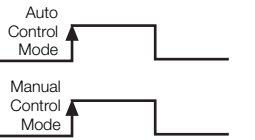

...Control / ...Loop 1 Output / ...A/M Select Sources

| | |
|---|---|
| Manual 1(2) Config O/P | Used when *Manual 1(2) Output* is set to *Config Value*. |
| A/M Toggle | The source required to toggle between *A/M* (*Auto* / *Manual*) control modes. When the digital signal is high, the controller is locked in *Manual* control mode (the front panel controls [see page 6] and other digital select signals have no effect). When the digital signal is low *Auto* control mode is selected. When in the low state, either the front panel controls or edge-triggered digital signals can be used to put the controller into *Manual* control mode. |
| A/M Output | Sets the (manual) output value to be set when the controller is put into *Manual* control mode using *A/M Toggle* source. |
| *Last Auto O/P* | Holds the output at its value prior to switching to *Manual* control mode. |
| *Man – 0%* | Sets the output to 0 %. |
| *Man – 100%* | Sets the output to 100 %. |
| *Config Value* | Sets the output to the value set in *A/M Config O/P*. |
| A/M Config O/P | Used when *A/M Output* is set to *Config Value*. |



...Control / ...Loop 1 Output

| | |
|---|---|
| **Slew Rate** | The output slew rate – restricts the maximum rate of change of the control output. |
| **Function** | Selects if the output slew rate function is enabled and when it applies. |
| *Off* | |
| *Up and Down* | The *Slew Rate* applies to increasing and decreasing output values. |
| *Up* | The *Slew Rate* applies to increasing output values. |
| *Down* | The *Slew Rate* applies to decreasing output values only. |
| **Rate** | The maximum rate of change of the control output (as % / s). |
| **Disable Source** | The (level-triggered) source required to disable slew rate control of the output. This source is level-triggered. |

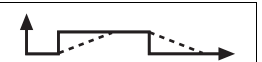



...Control / ...Loop 1 Output

| | |
|---|---|
| Tracking | Enables the control output to be configured to follow a tracking signal when in *Auto* control mode. When in *Manual* control mode, the output can be adjusted by the user as normal. If the slew rate function is enabled, the switching from *Manual* to *Auto* is bumpless. If the value set by the tracking signal is different to that set manually, the output ramps to its expected auto value at the speed set in the slew rate. If the *Signal Source* is set to *None*, tracking is disabled and the normal *PID* output (see page 32) is provided as the control output. |
| Source<br>Signal Source | Sets the source of the signal required to be tracked by the output in *Auto* control mode. If set to *None*, output tracking is disabled. |
| Mode | Selects if the output slew rate function is enabled and when it applies. |
| *In Auto* | Control output = tracking signal when in *Auto* control mode |
| *Auto + OP* | Control output = tracking signal + change in *PID* output, when in *Auto* control mode. |
| *When Enabled* | When enable source is active, control output = tracking signal when in *Auto* control mode. |
| *When Enabled + OP* | When enable source is active, control output = tracking signal + change in *PID* output, when in *Auto* control mode. |
| Enable Source | Sets the digital signal to enable output tracking.<br>**Note**. Applicable only if *Mode* = *When Enabled* or *When Enabled + OP*. |

...Control

**Loop 1 Split O/P***

The split output facility enables the *PID* control output (see page 32) to be split into 2 separate outputs. This enables heat / cool and other applications requiring dual outputs to be controlled. The linear relationship between the input from the *PID* algorithm and the 2 outputs is configured using the *Min* and *Max Input/Output* parameters (see below).

When operating with *Split O/P* in *Manual* control mode, manual adjustment is made to the input at the split output block (x axis). By default, the Operator page displays both output values (OP1 and OP2).

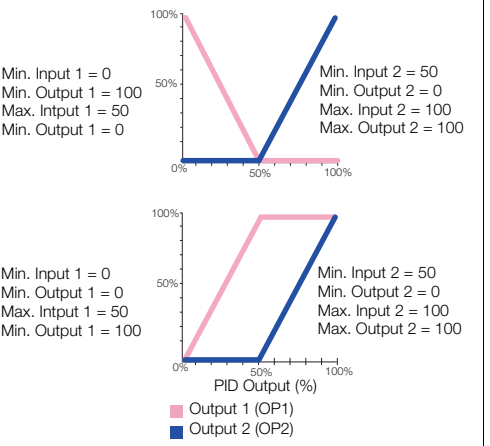


**Loop 1 Time Prop** See *Basic* level, page 28.

*Applicable only if the output type selected is *Split O/P* (see page 35).

## 7.5 Process Alarm




Used to configure up to 8 independent process alarms.

**Process Alarm**

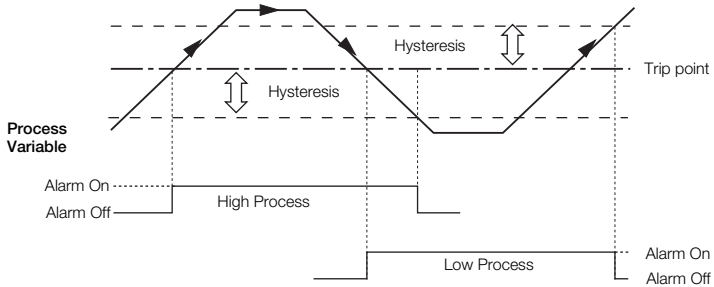


**High and Low Process Alarm Action**

...Process Alarm

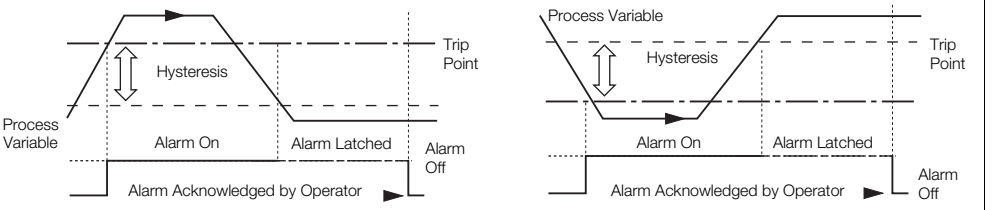


**High and Low Latch Alarm Action**

Alarm 1 (8)

| | |
|---|---|
| Type | Alarm types comprise: High Process, Low Process, High Latch, Low Latch. (Deviation alarms are configured using a high or low process alarm and selecting *Deviation* as the source.) |
| Tag | The alarm *Tag* is displayed as a diagnostic message and appears in the *Diagnostic Status Bar* and the *Diagnostic* view in the *Operator Level*. |
| Source | The analog source – see Appendix A.2, page 80 for description of sources. |
| Trip | Alarm trip level in engineering units. |

...Process Alarm / ... Alarm 1 (to 8)

| | |
|---|---|
| Hysteresis | Hysteresis trip level in engineering units. Activated at the alarm trip level but deactivated only when the process variable has moved into the safe region by an amount equal to the hysteresis value – see Process Alarm examples on page 61. |
| Time Hysteresis | If an alarm trip value is exceeded, the alarm does not become active until the *Time Hysteresis* value has expired. If the signal goes out of the alarm condition before the *Time Hysteresis* has expired, the hysteresis timer is reset. |
| Display Enable | Enables an alarm to be used for control purposes without it appearing as an active alarm state in the *Operator Level* or *Diagnostic* view – see page 23. |
| Acknowledge Source | The source required to acknowledge all active alarms. Acknowledge occurs on rising edge of the digital signal – see Appendix A, page 80 for description of sources.   |
| Enable Source | The source required to enable alarms. If *the* source is *None*, alarms are always enabled – see Appendix A, page 80 for description of sources. |

## 7.6 Communication




Used to setup communications parameters for the MODBUS / Ethernet communication protocols – see separate User Guide (IM/CM/C-EN).

## 7.7 Diagnostics

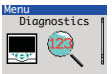


Used to view diagnostic data – see section 7.7.1, page 66 for description of diagnostic messages and recommended corrective action(s).

**Diagnostic History** Displays a log of the diagnostic messages generated by the controller. Each diagnostic condition has a classification code conforming to NAMUR NE107.

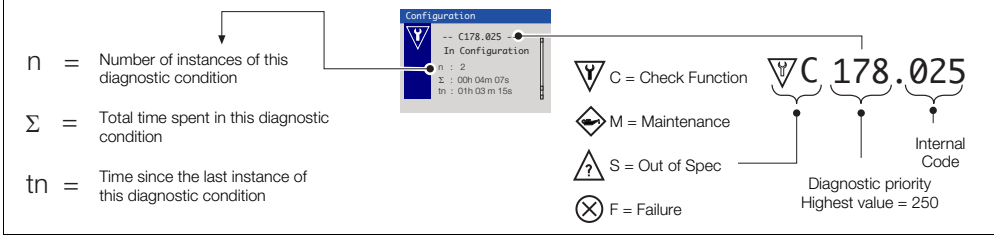

...Diagnostics

| **Source Analysis** | |
|---|---|
| Analog Sources | Enables the current value of any analog source to be viewed. |
| **Analog Source** | Selects the analog signal to be viewed – see section A.2, page 80. |
| View Value | Displays the value of the analog signal selected. |
| Digital Sources | Enables the current state of any digital source to be viewed. |
| **Digital Source** | Selects the digital signal to be viewed – see section A.1, page 80. |
| View State | Displays the state of the digital signal selected. |
| Invalid Sources | Select edit to display any invalid analog or digital sources that are used in the configuration.<br>Reasons for invalid sources include:<br>■ Hardware not fitted<br>■ Software not fitted<br>■ Digital I/O configured as wrong type<br>■ Alarms not configured<br>■ Math, logic, timer or custom linearizer not configured |

### 7.7.1 Diagnostic Messages

| Icon | Number / Message | Possible Cause | Suggested Action |
|---|---|---|---|
| ⊗ | 242.004 (240.005) ADC 1(2) Failed | Temporary or permanent failure of analog to digital converter on the main I/O board. | Cycle power to device.<br>If problem persists replace main I/O board. Contact local service organization. |
| ⊗ | 250.000 PV 1 Failed | Problem with Input assigned to Loop 1 PV. Broken sensor leads, defective input source or input signal out of permitted range. | Check wiring. Check input source.<br>Check if input signal is outside permitted limits. |
| ⊗ | 246.002 RSP 1 Failed | Problem with Input assigned to Loop 1 Remote Setpoint. Broken sensor leads, defective input source or input signal out of permitted range. | Check wiring. Check input source.<br>Check if input signal is outside permitted limits. |
| ⊗ | 222.014 (220.015) CJ 1(2) Failed | Error in Cold junction measurement associated with AIN1. Wiring fault or defective sensor. | Check cold junction device is correctly fitted.<br>Ensure I/P 2(4) is turned off.<br>Replace CJ sensor. |
| ⊗ | 226.012 DV 1 Failed | Problem with input assigned to Loop 1 disturbance variable. Broken sensor leads, defective input source or input signal out of permitted range. | Check wiring. Check input source.<br>Check if input signal is outside permitted limits. |
| ⊗ | 230.010 WV 1 Failed | Problem with input assigned to Loop 1 wild variable. Broken sensor leads, defective input source or input signal out of permitted range. | Check wiring. Check input source.<br>Check if input signal is outside permitted limits. |

*Table 7.1 Diagnostic Messages*

| Icon | Number / Message | Possible Cause | Suggested Action |
|---|---|---|---|
| ⊗ | 234.008 (232.009) PFB 1(2) Failed | Problem with input assigned to Loop 1 (2) position feedback. Broken sensor leads, defective input source or input signal out of permitted range. | Check wiring. Check input source.<br>Check if input signal is outside permitted limits. |
| ⊗ | 216.016 NV Error Proc Bd | Failure of non-volatile memory on processor / display board or permanent corruption of its data. | Check all configuration parameters and correct any errors. Acknowledge error.<br>If problem persists contact local service organization. |
| ⊗ | 214.017 NV Error Main Bd | Failure of non-volatile memory on main board or permanent corruption of its data. | Check calibration of AIN1, AIN2 and AO1.<br>Recalibrate if necessary. Acknowledge error.<br>If problem persists contact local service organization. |
| ⊗ | 212.018 NV Error Opt Bd 1 | Failure of non-volatile memory on option board 1 or permanent corruption of its data. | Recalibrate If necessary. Acknowledge error.<br>If problem persists contact local service organization. |
| ⊗ | 210.019 NV Error Opt Bd 2 | Failure of non-volatile memory on option board 2 or permanent corruption of its data. | Check calibration of AO2.<br>Recalibrate If necessary. Acknowledge error.<br>If problem persists contact local service organization. |

*Table 7.1 Diagnostic Messages (Continued)*

| Icon | Number / Message | Possible Cause | Suggested Action |
|---|---|---|---|
| ⊗ | 208.020 NV Error Comm Bd | Failure of non-volatile memory on communications board or permanent corruption of its data. | Acknowledge error. Check communications board is correctly identified by device.<br>If problem persists contact local service organization. |
| ⊗ | Config Error | The configuration contains a source that is no longer present or valid. | Check invalid sources in Diagnostics menu – see section 7.7, page 64.<br>Check configuration, check I/O required for configuration is present and correct any illegal use of the invalid signal by changing configuration or fitting additional option cards. |
| ◈ | 054.044 Tune Lp1 Fail | Autotune has failed to complete its sequence or has calculated values outside of its permitted range. | Check process response. Consider changing the Autotune dynamic setting – see page 32.<br>Ensure process is stable and repeat autotune.<br>If problem persists tune the loop manually. |
| ◈ | 070.040 (066.041) Tuner 1(2) Abort | Autotune has been aborted by the user. | |
| ◈ | 078.038 (074.039) Adaptive 1(2) Warn | Parameters calculated by adaptive control have changed by more than the permitted amounts. | Check process for issues that may have caused a large change in its dynamics, for example, a blocked valve.<br>Reset adaptive control.<br>Perform a fresh autotune. |

*Table 7.1 Diagnostic Messages (Continued)*

| Icon | Number / Message | Possible Cause | Suggested Action |
|---|---|---|---|
| | 086.036<br>(082.037)<br>Oscillation 1(2) | Abnormal oscillations in the control loop. | Check process.<br>Perform new manual or Autotune. |
| | 094.034<br>(090.035)<br>Valve 1(2) Sticking | Motorized valve travel time is significantly slower than configured time. | Check valve to identify reason for sticking.<br>Check correct travel time is entered in configuration. |
| | 168.026<br>(166.027)<br>(164.028)<br>Tuner 1<br>Phase 1..3 | Autotune is in progress – see page 30 for details of each phase. | Autotune can be aborted if required by selecting *Manual* control mode. |
| | 160.030<br>(158.031)<br>156.032)<br>Tuner 2<br>Phase 1..3 | Autotune is in progress – see page 30 for details of each phase. | Autotune can be aborted if required by selecting *Manual* control mode. |
| | 162.029<br>(154.033)<br>Tuner 1(2) Pass | Autotune has completed successfully and calculated new control parameters. | Acknowledge diagnostic. |
| | 178.025<br>In Configuration | The device is currently in the configuration mode. | This is for use with remote access via digital communications. |

*Table 7.1 Diagnostic Messages (Continued)*

## 7.8 Device Info




Used to display read-only factory-set parameters for the controller.

| | |
|---|---|
| **Instrument Type** | The controller's model number (for example, CM30). |
| **I/O Build** | The input / output (I/O) configuration. |
| **No. Analog Inputs** | The number of analog inputs available. |
| **No. Analog Outputs** | The number of analog outputs available. |
| **No. Relays** | The number of relays available. |
| **No. Digital I/O** | The number of digital inputs / outputs available. |
| **Functionality** | The current functional setting of the controller (for example, *Single Loop*). |
| **Serial No.** | The factory serial number. |
| **Hardware Revision** | The controller's hardware version number. |
| **Software Revision** | The controller's software version number. |

# 8 Templates and Functionality

**Notes.** Output assignments can be changed in *Input/Output* configuration – see page 41.

## 8.1 Single Loop / Single Loop with Remote Setpoint

This template provides basic feedback control using three-term PID or On/Off control. The controller output is calculated from the difference between the process variable and the control setpoint. The control setpoint can be a fixed value entered by the user (Local setpoint) or an input from a remote source (remote setpoint).

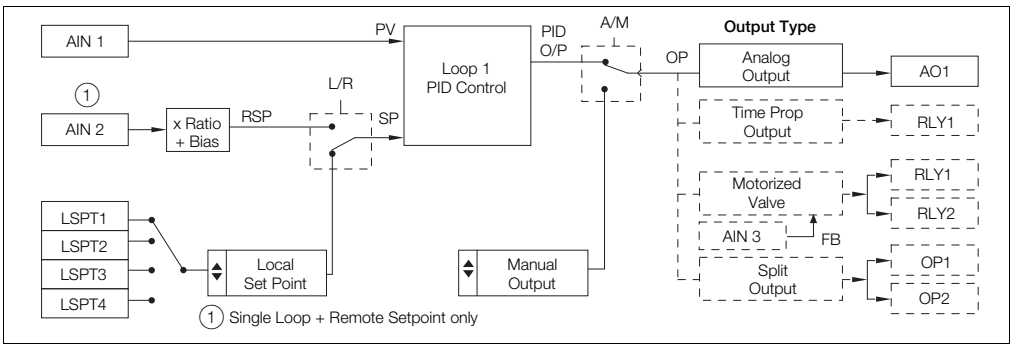

## 9 PC Configuration

In addition to local configuration via the front panel keys, the controller can be configured from a PC via the infrared port. The infrared port is activated when *Advanced* level is accessed. For further information contact your sales representative.

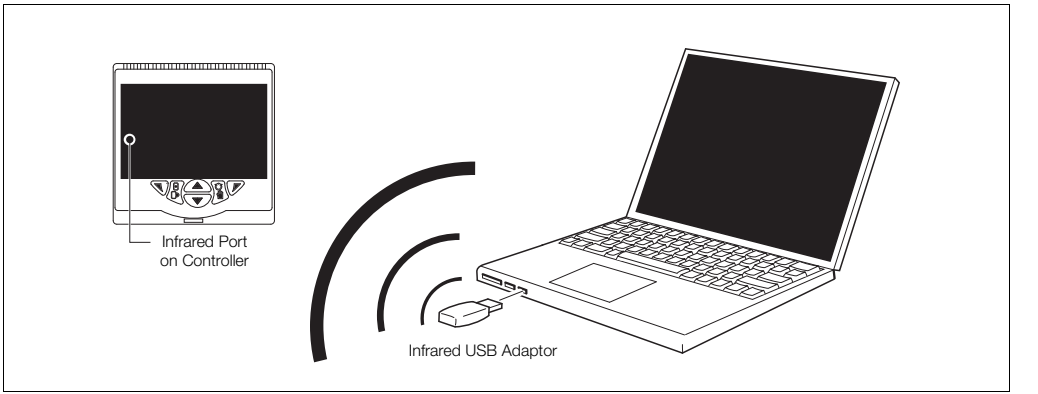


*Fig. 9.1 PC Configuration via Infrared Port*

# 10 Specification

## Operation

### Display

Color 1/4 VGA TFT, liquid crystal display (LCD) with built-in backlight

### Language

English, German, French, Italian and Spanish

### Operator keypad

| | |
|---|---|
| CM10 | 4 Tactile membrane keys |
| CM30 and CM50 | 6 Tactile membrane keys |

## Security

### Password protection

| | |
|---|---|
| Basic / Advanced | User-assigned password protection (not set at factory) |

## Standard functions

### Control strategies

| | |
|---|---|
| Basic templates | Single loop with local setpoint |
| | Single loop with remote setpoint |

### Control output types

Current proportioning

Time proportioning

On/Off

Split output – with combinations of relay, digital output and current outputs

### Control parameters

| | |
|---|---|
| Proportional band | 0.0 to 999.9 % |
| Integral | 0 to 10000 s |
| Derivative | 0.0 to 999.9 s |
| Manual Reset | 0.0 to 100.0 % |

**Setpoints**

Local

| | |
|---|---|
| CM10 | 2 Local set points, all selectable via digital inputs or front panel |
| CM30 /CM50 | 4 Local set points, all selectable via digital inputs or front panel |
| Remote | Selectable via digital input or front panel keys |

**Autotune**

On-demand calculation of control settings

**Process Alarms**

| | |
|---|---|
| Number | 8 |
| Types | High / Low process<br>High / Low latch |
| Source | Fully configurable (for example, PV, analog input, math block inbuilt, OP control loop deviation) |
| Hysteresis | Level and time |
| Alarm enable | Enable / disable of individual alarms via a digital signal |

**Acknowledgement**

Via front panel keys or digital signals

## Analog inputs

**Universal process inputs**

| | |
|---|---|
| CM10 | 1 Standard |
| CM30 / CM50 | 2 (1 Standard, 1 optional) |
| Type | Voltage<br>Current<br>Resistance (ohms)<br>3-Wire RTD<br>Thermocouple<br>Digital volt-free<br>Digital 24 V<br>Frequency<br>Pulse |

**Non-universal process inputs**

| | |
|---|---|
| CM10 | 1 Standard |
| CM30 / CM50 | 2 (1 Standard, 1 optional) |
| Type | Voltage<br>Current<br>Thermocouple (if associated universal input is configured as Thermocouple)<br>Digital volt-free<br>Digital 24 V |

**Thermocouple types**

B, E, J, K, L, N, R, S, T

**Resistance thermometer**

Pt100

**Other linearizations**
$\sqrt{x}$, $x^{3/2}$, $x^{5/2}$,

**Digital filter**
Programmable 0 to 60 s

**Display range**
–9999 to 99999

**Update rate**
125 ms

**Common mode noise rejection**
>120 dB at 50/60 Hz with 300 Ω imbalance resistance

**Normal (series) mode noise rejection**
>60 dB at 50/60 Hz

**CJC rejection ratio**
0.05 °C / °C change in ambient temperature

**Temperature stability**
0.02 % / °C or 2 µV / °C (1 µV / °F)

**Long term (input) drift**
<0.1 % of reading or 10 µV annually

**Input impedance**
>10 MΩ (millivolts input)
10 Ω (mA input)

## Inputs

| Thermocouple | Maximum Range °C (°F) | Accuracy (% of reading) °C (°F) |
|---|---|---|
| B* | –18 to 1800 (0 to 3270) | 0.1 % or ±2 °C (3.6 °F) (above 200 °C [392 °F]) * |
| E | –100 to 900 (–140 to 1650) | 0.1 % or ±0.5 °C (0.9 °F) |
| J | –100 to 900 (–140 to 1650) | 0.1 % or ±0.5 °C (0.9 °F) |
| K | –100 to 1300 (–140 to 2350) | 0.1 % or ±0.5 °C (0.9 °F) |
| L | –100 to 900 (–140 to 1650) | 0.1 % or ±1.5 °C (2.7 °F) |
| N | –200 to 1300 (–325 to 2350) | 0.1 % or ±0.5 °C (0.9 °F) |
| R* | –18 to 1700 (0 to 3000) | 0.1 % or ±1 °C (1.8 °F) (above 300 °C [540 °F]) |
| S* | –18 to 1700 (0 to 3000) | 0.1 % or ±1 °C (1.8 °F) (above 200 °C [392 °F]) |
| T* | –250 to 300 (–400 to 550) | 0.1 % or ±0.5 °C (0.9 °F) (above –150 °C [–238 °F]) |

*For B, R, S and T thermocouples, accuracy is not guaranteed below the value stated.

| RTD | Maximum Range °C (°F) | Accuracy (% of reading) |
|---|---|---|
| Pt100 | –200 to 600 (–325 to 1100) | 0.1 % or ±0.5 °C (0.9 °F) |

| Linear Inputs | Standard Analog Input | Accuracy (% of reading) |
|---|---|---|
| Millivolts | 0 to 150 mV | 0.1 % or ±20 µV |
| Milliamps | 0 to 50 mA | 0.2 % or ±4 µA |
| Volts | 0 to 25 V | 0.2 % or ±1 mV |
| Resistance Ω (low) | 0 to 550 Ω | 0.2 % or ±0.1 Ω |
| Resistance Ω (high) | 0 to 10 kΩ | 0.1 % or ±0.5 Ω |
| Sample Interval | 125 ms per sample | |

| Digital Inputs | |
|---|---|
| **Type** | **Volt-free or 24 V** |
| Minimum pulse duration | Analog inputs 1 and 2:<br>■ Single inputs configured – 250 ms<br>■ Both inputs configured as analog or digital – 500 ms<br>Analog inputs 3 and 4 (not CM10):<br>■ Single inputs configured – 250 ms<br>■ Both inputs configured as analog or digital – 500 ms<br>Consider analog inputs 1 / 2 and 3 / 4 independently |

| Frequency input* | |
|---|---|
| Frequency range | 0 to 6000 Hz |
| 1-signal | 15 to 30 V |
| 0-signal | –3 to 5 V |

*For use with devices with open collector outputs

## Outputs

### Controls / retransmission outputs

| | |
|---|---|
| Number | 2 (1 Standard, 1 optional) |
| Type | Configurable as analog or digital pulse |
| Isolation | Galvanically isolated from the rest of the circuitry, 500 V for 1 minute |
| Analog range | 0 to 20 mA Programmable |
| Load | 750 Ω Max. |
| Accuracy | 0.25 % of output or ± 10 µA |

### Relays

| | | |
|---|---|---|
| Number | CM10 / CM30: 4 (1 standard, 3 optional)<br>CM50: 4 (2 standard, 2 optional) | |
| Type | CM10, CM30: Standard with changeover contacts. Optional contacts selectable as N/O or N/C (by jumper)<br>CM50: Selectable as N/O or N/C (by jumper) | |
| Contact ratings | | |
| CM10: | Relay 1: | 5 A, 240 V |
| | Relays 2, 3, 4: | 5A, 240 V (max. ambient 40 °C (104 °F) |
| | Relays 2, 3, 4: | 2A, 240 V (max. ambient 55 °C (131 °F) |
| CM30, CM50: | 5 A, 240 V | |
| Update rate | 125 ms | |

### Digital input / output

| | |
|---|---|
| CM10 | 2 (Optional) |
| CM30 / CM50 | 6 (2 Standard, 4 optional) |
| Type | User-programmable as input or output<br>Minimum input pulse duration – 125 ms<br>■ Input<br>– volt-free or 24 V DC<br>– 1-signal: 15 to 30 V<br>– 0-signal: –3 to 5 V<br>– Conforms to IEC 61131-2<br>■ Output<br>– Open collector output<br>– 30 V, 100 mA max. switched<br>– 1-signal: 13.0 to 30.2<br>– Conforms to IEC 61131-2 |
| Update rate | 125 ms |

### 2-Wire transmitter power supply

| | |
|---|---|
| CM10 | 1 (Standard) |
| CM30 / CM50 | 2 (1 Standard, 1 optional) |
| Voltage | 24 V DC |
| Drive | 2 Loops for each transmitter psu, 45 mA max. |

## Communications

For MODBUS and Ethernet communications see separate User Guide (IM/CM/C–EN).

**Infrared port**

| | |
|---|---|
| Baud rate | up to 115 kBaud |
| Distance | up to 1 m |
| Functions | firmware upgrade, configuration upload / download |

## EMC

**Emissions & immunity**

Meets requirements of IEC61326 for an Industrial Environment

## Environmental

**Operating temperature range**

0 to 55 °C (32 to 131 °F)*

**Operating humidity range**

5 to 95 %RH (non-condensing)

**Storage temperature range**

–20 to 70 °C (–4 to 158 °F)

*Restrictions may apply, refer to relay specification

**Enclosure sealing**

| | |
|---|---|
| Front face | IP66 / NEMA 4X |
| Rest of enclosure | IP20 |

**Vibration**

Conforms to EN60068-2-6

## Safety

**Approvals and certifications**

EN61010-1

cULus

**General safety**

Pollution category 2

Insulation category 2

**Isolation (to inputs)**

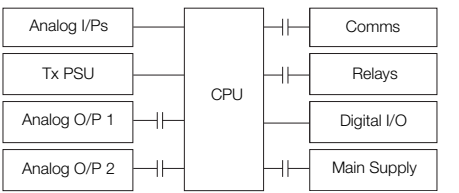


**Key**

= Isolation

## Electrical

**Supply ranges**

100 to 240 V AC ± 10 % (90 V min. to 264 V max.) 50 / 60 Hz

10 to 36 V DC (optional)

**Power consumption**

10 W max.

**Power interruption protection**

No effect for interrupts of up to 60 ms

## Physical

**Size**

| | |
|---|---|
| CM10 | 50 x 97 x 141 mm (2.0 x 3.8 x 5.5 in.) |
| CM30 | 97 x 97 x 141 mm (3.8 x 3.8 x 5.5 in.) |
| CM50 | 144 x 76 x 146 mm (5.6 x 3.0 x 5.7 in.) |

**Weight**

| | |
|---|---|
| CM10 | 0.38 kg (0.84 lb) approx. (unpacked) |
| CM30 | 0.5 kg (1.1 lb) approx. (unpacked) |
| CM50 | 0.57 kg (1.27 lb) approx. (unpacked) |

**Panel cutout**

| | |
|---|---|
| CM10 | 45 x 92 mm (1.8 x 3.6 in.),<br>121 mm (4.8 in.) behind panel |
| CM30 | 92 x 92 mm (3.6 x 3.6 in.),<br>121 mm (4.8 in.) behind panel |
| CM50 | 138 x 68 mm (5.4 x 2.7 in.)<br>123 mm (4.9 in.) behind panel |

**Case material**

Glass-filled polycarbonate

DS/CM10–EN Rev. L
DS/CM30–EN Rev. L
DS/CM50–EN Rev. K

# Appendix A – Digital and Analog Sources

**Note.** Numbers in brackets indicate additional parameters, for example, 'Alarm 1(8) Ack. State indicates that 8 *Alarm Ack. State* parameters are available.

## A.1 Digital Sources

| Source Name | Description [Comment] |
|---|---|
| Alarm 1(8) Ack. State | Acknowledged alarm = 0<br>Unacknowledged alarm = 1 |
| Alarm 1(8) State | Alarm state |
| Anlg IP 1(4) Fail | Active input failure (when the signal detected at the analog input is outside the fault detect level specified during configuration) |
| AO1(2) Loop Break | Analog output |
| IP 1(4) Digital State | Input 1(4) digital state |
| Loop 1 SP Mode | Setpoint mode selected<br>0 = Local, 1 = Remote |
| Loop 1 Auto Mode | Automatic control mode<br>1 = Setpoint selected |
| Loop 1 LSP 1(4) State | Local setpoint state |
| Loop 1 Manual Mode | Manual control mode<br>1 = Manual |
| Loop 1 TP OP1 | Time proportioning output |
| Softkey Toggle | Front panel soft key toggles the source's state |
| Softkey Edge | Front panel soft key sets the source active on key press |

## A.2 Analog Sources

| Source Name | Description |
|---|---|
| Anlg IP 1 (4) | Analog input |
| Loop 1 Control OP | Control output value |
| Loop 1 Deviation | Loop 1 deviation |
| Loop 1 LSP | Local setpoint loop |
| Loop 1 PV | Loop 1(2) process variable |
| Loop 1 SP | Loop control setpoint |
| Loop 1 Split OP1 | Loop 1 split output |

## Appendix B – Configuration Error Codes

Configuration errors are generated when a signal assigned as a source for something has failed. Configuration errors are displayed as numerical codes and a description of each code is shown in the following tables:

| Error Code | Error Description |
|---|---|
| 1 | Analog Input Value A1 (I/P 1) |
| 2 | Analog Input Value A2 (I/P 2) |
| 3 | Analog Input Value B1 (I/P 3 – CM50) |
| 4 | Analog Input Value B2 (I/P 4 – CM50) |
| 5 | Analog Input Value C1 (I/P 3 – CM30) |
| 6 | Analog Input Value C2 (I/P 4 – CM30) |
| 9 | Setpoint Selected LSPT Value 1 |
| 10 | Setpoint Contrl SP Value 1 |
| 11 | Setpoint Selected Ratio Value 1 |
| 12 | Setpoint Selected Bias Value 1 |
| 13 | Setpoint Actual Ratio Value 1 |
| 14 | Setpoint Selected LSPT Value 2 |
| 15 | Setpoint Contrl SP Value 2 |

| Error Code | Error Description |
|---|---|
| 16 | Setpoint Selected Ratio Value 2 |
| 17 | Setpoint Selected Bias Value 2 |
| 18 | Setpoint Actual Ratio Value 2 |
| 42 | Control Output Value 1 |
| 43 | Control Output Value 2 |
| 44 | Dual Output Loop 1 Value 1 |
| 45 | Dual Output Loop 1 Value 2 |
| 46 | Dual Output Loop 2 Value 1 |
| 47 | Dual Output Loop 2 Value 2 |
| 48 | Mot Valve Output 1 |
| 49 | Mot Valve Output 2 |
| 50 | PV Maximum Value 1 |
| 51 | PV Minimum Value 1 |
| 52 | PV Average Value 1 |
| 53 | Volume Value 1 |
| 54 | PV Maximum Value 2 |

| Error Code | Error Description |
|---|---|
| 55 | PV Minimum Value 2 |
| 56 | PV Average Value 2 |
| 57 | Volume Value 2 |
| 58 | Customer Linearizer Value 1 |
| 59 | Customer Linearizer Value 2 |
| 60 | Profile User Value 1 |
| 61 | Profile User Value 2 |
| 62 | Mot Valve Position 1 |
| 63 | Mot Valve Position 2 |
| 64 | template Block PV Value 1 |
| 65 | Template Block PV Value 2 |
| 66 | Template Block Deviation Value 1 |
| 67 | Template Block Deviation Value 2 |
| 68 | Template Block Feedforward Value 1 |
| 69 | Template Block Feedforward Value 2 |

| Error Code | Error Description |
|---|---|
| 70 | Analogue Input Fail State A1 |
| 71 | Analogue Input Fail State A2 |
| 72 | Analogue Input Fail State B1 |
| 73 | Analogue Input Fail State B2 |
| 74 | Analogue Input Fail State C1 |
| 75 | Analogue Input Fail State C2 |
| 84 | Custom Linearizer Fail State 1 |
| 85 | Custom Linearizer Fail State 2 |
| 94 | Analog Input State A1 (I/P 1) |
| 95 | Analog Input State A2 (I/P 2) |
| 96 | Analog Input State B1 (I/P 3 – CM50) |
| 97 | Analog Input State B2 (I/P 4 – CM50) |
| 98 | Analog Input State C1 (I/P 3 – CM30) |
| 99 | Analog Input State C2 (I/P 4 – CM30) |
| 100 | Setpoint Remote Mode State 1 |
| 101 | Setpoint LSPT 1 Selected State 1 |
| 102 | Setpoint LSPT 2 Selected State 1 |

| Error Code | Error Description |
|---|---|
| 103 | Setpoint LSPT 3 Selected State 1 |
| 104 | Setpoint LSPT 4 Selected State 1 |
| 105 | Setpoint Remote Mode State 2 |
| 106 | Setpoint LSPT 1 Selected State 2 |
| 107 | Setpoint LSPT 2 Selected State 2 |
| 108 | Setpoint LSPT 3 Selected State 2 |
| 109 | Setpoint LSPT 4 Selected State 2 |
| 110 | Digital Input State 1 |
| 111 | Digital Input State 2 |
| 112 | Digital Input State 3 |
| 113 | Digital Input State 4 |
| 114 | Digital Input State 5 |
| 115 | Digital Input State 6 |
| 131 | Logic Equation Result 1 |
| 132 | Logic Equation Result 2 |
| 133 | Logic Equation Result 3 |
| 134 | Logic Equation Result 4 |
| 135 | Logic Equation Result 5 |
| 136 | Logic Equation Result 6 |
| 137 | Logic Equation Result 7 |

| Error Code | Error Description |
|---|---|
| 138 | Logic Equation Result 8 |
| 139 | Real Time Alarm State 1 |
| 140 | Real Time Alarm State 2 |
| 141 | Alarm State 1 |
| 142 | Alarm Ack State 1 |
| 143 | Alarm State 2 |
| 144 | Alarm Ack State 2 |
| 145 | Alarm State 3 |
| 146 | Alarm Ack State 3 |
| 147 | Alarm State 4 |
| 148 | Alarm Ack State 4 |
| 149 | Alarm State 5 |
| 150 | Alarm Ack State 5 |
| 151 | Alarm State 6 |
| 152 | Alarm Ack State 6 |
| 153 | Alarm State 7 |
| 154 | Alarm Ack State 7 |

| Error Code | Error Description |
|---|---|
| 155 | Alarm State 8 |
| 156 | Alarm Ack State 8 |
| 157 | Time Prop State 1 |
| 158 | Time Prop State 2 |
| 159 | Time Prop State 3 |
| 160 | Time Prop State 4 |
| 161 | Control O/P Auto State 1 |
| 162 | Control O/P Manual State 1 |
| 163 | Control O/P Track Status 1 |
| 164 | Control O/P Auto State 2 |
| 165 | Control O/P Manual State 2 |
| 166 | Control O/P Track Status 2 |
| 167 | Analog O/P Loop break A1 |
| 168 | Analog O/P Loop break B1 |
| 177 | Delay Timer State 1 |
| 178 | Delay Timer State 2 |
| 188 | Profiler Timed Event |
| 189 | Toggle Signal |
| 190 | Edge Signal |

## Appendix C – Analog Input (Engineering) Units

| Unit | Description |
|---|---|
| % | % |
| % sat | % saturation |
| %dO2 | % dissolved oxygen |
| %HCl | % hydrochloric acid |
| %N2 | % nitrogen |
| %O2 | % oxygen |
| %OBS | % obscuration |
| %RH | % relative humidity |
| A | amps |
| bar | bar |
| CUMEC | cubic metre per second |
| deg C / F | degrees Celsius / Fahrenheit |
| Feet | imperial feet |
| $ft^3/d$, $ft^3/h$, $ft^3/m$, $ft^3/s$ | cubic feet per day, hour, minute, second. |
| FTU | formazine turbidity units |
| g/d, g/h, g/l | grams per day, hour, liter |

| Unit | Description |
|---|---|
| gal/d (UK) | imperial gallons per day |
| gal/d (US) | US gallons per day |
| gal/h (UK) / (US) | imperial / US gallons per hour |
| gal/m, s (UK) / (US) | imperial / US gallons per minute, second. |
| Hz | hertz |
| Inches | imperial inches |
| Kelvin | degrees Kelvin |
| kg/d, kg/h, kg/m | kilograms per day, hour, minute. |
| kg/s | kilograms per second |
| kHz | kilohertz |
| l/d, l/h, l/m, l/s | liters per day, hour, minute, second. |
| lb/d, lb/h, lb/m, lb/s | pounds per day, hour, minute, second. |
| m WG | meters water gauge |
| $m^3/d$, $m^3/h$, $m^3/m$, $m^3/s$ | cubic meters per day, hour, minute, second. |
| mbar | millibar |
| mg/kg | milligrams per kilogram |

| Unit | Description |
|---|---|
| Mgal/d (UK) | imperial mega gallons per day |
| Mgal/d (US) | US mega gallons per day |
| mho | conductance |
| Ml/d, Ml/h | megaliters per day, hour. |
| ml/h, ml/m | milliliters per hour, minute. |
| Ml/s | megaliters per second |
| mS/cm, mS/m | milliSiemens per centimeter, meter |
| mV | millivolts |
| MV | megavolts |
| NTU | nephelometric turbidity units |
| pb | parts per billion |
| pH | potential Hydrogen |
| pm | parts per million |
| psi | pounds per square inch |
| S | Siemens |
| SCFM | standard cubic feet per minute |

| Unit | Description |
|---|---|
| T/d, T/h, T/m | metric tonnes per day, hour, minute. |
| T/s | metric tonnes per second |
| ton/d, ton/h, ton/m, ton/s | imperial tons per day, hour, minute, second. |
| ug/kg | micrograms per kilogram |
| uS/cm, uS/m | microSiemens per centimeter / meter |
| uV | microvolts |

## Appendix D – Output Type Assignments

| Output Type | AO 1 | AO 2 | DIO 1 | DIO 2 | RLY1 | RLY2 | RLY3 | RLY4 |
|---|---|---|---|---|---|---|---|---|
| Analog | OP | PV | | | ALM 1 | ALM 2 | ALM 3 | ALM 4 |
| Time Proportioning | PV | SP | | | OP | ALM 1 | ALM 2 | ALM 3 |
| Split Output Analog / Relay | OP 1 | PV | | | OP 2 | ALM 1 | ALM 2 | ALM 3 |
| Split Output Analog / Digital | OP 1 | PV | OP 2 | | ALM 1 | ALM 2 | ALM 3 | ALM 4 |
| Split Output Relay / Relay | PV | SP | | | OP 1 | OP 2 | ALM 1 | ALM 2 |
| Split Output Relay / Digital | PV | SP | OP 2 | | OP 1 | ALM 1 | ALM 2 | ALM 3 |
| Split Output Digital / Relay | PV | SP | OP 1 | | OP 2 | ALM 1 | ALM 2 | ALM 3 |
| Split Output Digital / Digital | PV | SP | OP 1 | OP 2 | ALM 1 | ALM 2 | ALM 3 | ALM 4 |
| Split Output Analog / Analog | OP 1 | OP 2 | | | ALM 1 | ALM 2 | ALM 3 | ALM 4 |

... *Advanced Level

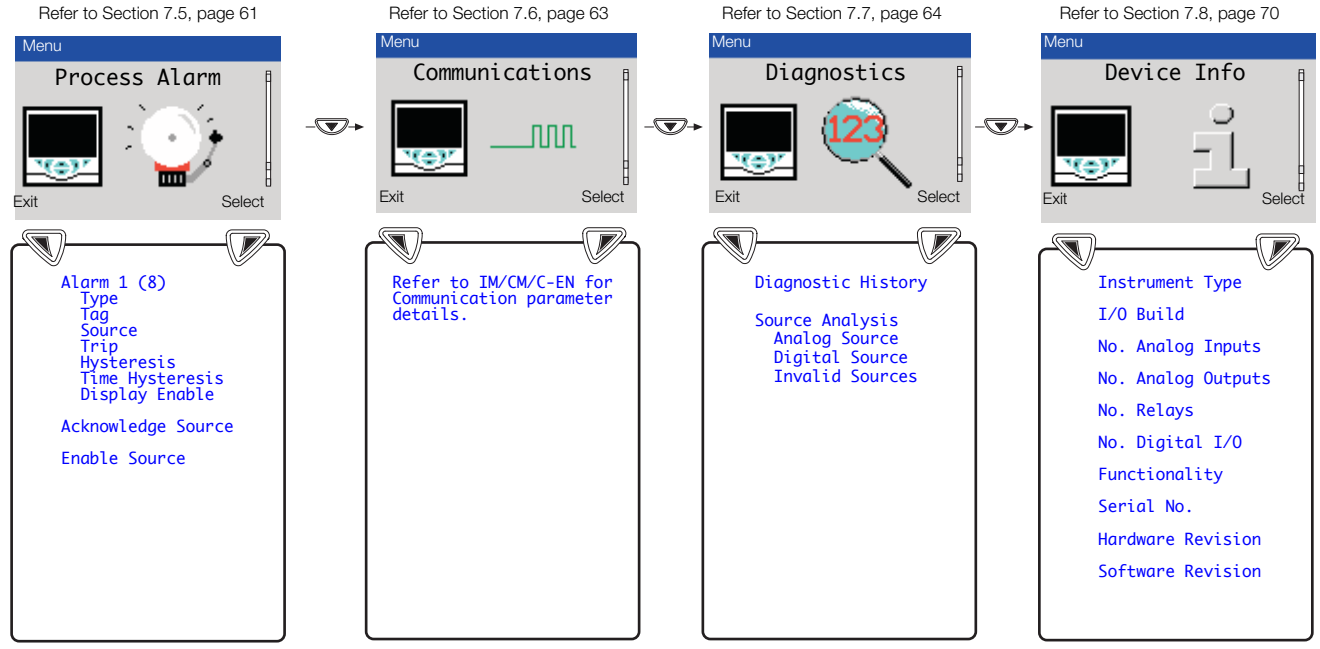


*When in Advanced Level (configuration) mode, press and hold the key to return to the standard Operator page – see Fig. 3.1, page page 6

## Customer Support

We provide a comprehensive after sales service via a Worldwide Service Organization. Contact one of the following offices for details on your nearest Service and Repair Centre.

**UK**
ABB Limited
Tel: +44 (0)1480 475321
Fax: +44 (0)1480 217948

**USA**
ABB Inc.
Tel: +1 215 674 6000
Fax: +1 215 674 7183

**Client Warranty**
Prior to installation, the equipment referred to in this manual must be stored in a clean, dry environment, in accordance with the Company's published specification.
Periodic checks must be made on the equipment's condition. In the event of a failure under warranty, the following documentation must be provided as substantiation:
1 A listing evidencing process operation and alarm logs at time of failure.
2 Copies of all storage, installation, operating and maintenance records relating to the alleged faulty unit.

# Contact us


**ABB Limited**
**Process Automation**
Howard Road
St. Neots
Cambridgeshire PE19 8EU
UK
Tel: +44 (0)1480 475321
Fax: +44 (0)1480 217948

**ABB Inc.**
**Process Automation**
125 E. County Line Road
Warminster
PA 18974
USA
Tel: +1 215 674 6000
Fax: +1 215 674 7183

**www.abb.com**


Note
We reserve the right to make technical changes or modify the contents of this document without prior notice. With regard to purchase orders, the agreed particulars shall prevail. ABB does not accept any responsibility whatsoever for potential errors or possible lack of information in this document.


We reserve all rights in this document and in the subject matter and illustrations contained therein. Any reproduction, disclosure to third parties or utilization of its contents in whole or in parts – is forbidden without prior written consent of ABB.

Copyright© 2013 ABB
All rights reserved



IM/CM/B–EN Rev. K 04.2013


Power and productivity
for a better world™