**Connections all at the rear end in one plane, easily accessible when mounting block-wise**

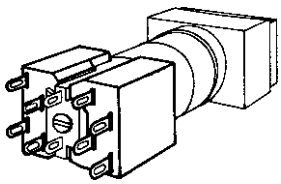

**Solder terminals**

**For wire 2x0,75 $mm^2$ or strands 1x1 $mm^2$.**

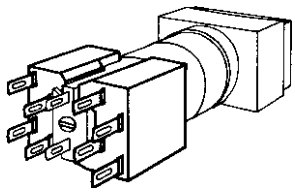

**Faston terminals**
**2,8 x 0,5 mm**

**For fasten plug and cable plug,**

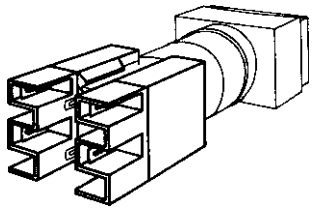

**Faston terminals**
**2,8 x 0,5 mm**

**With extended insulation for single connectors.**

**Quick mounting of the contact blocks simply by sliding on and securing**

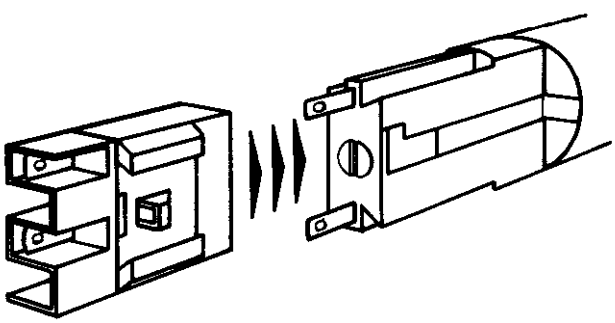

**Assembly:** **The contact block is a sliding fit onto the dovetailed switch body; turn the nick of the red locking pin parallel to the dovetail.**

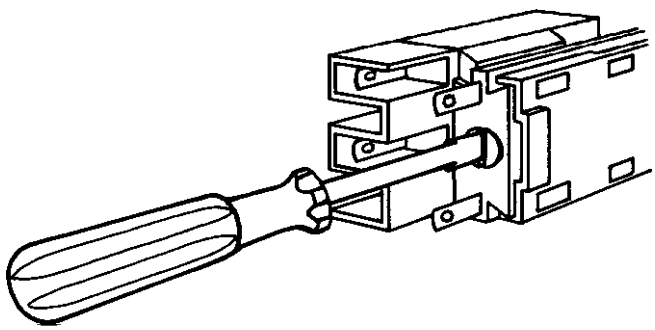

**Securing:** **By a quarer-turn to the right of the red locking pin (with a screwdriver),**

## Selector mechanism

## Cut stock investment while building prototypes or for servicing.

**You decide the function impulse switch or latching switch by means of the simple and proven built in selector mechanism**

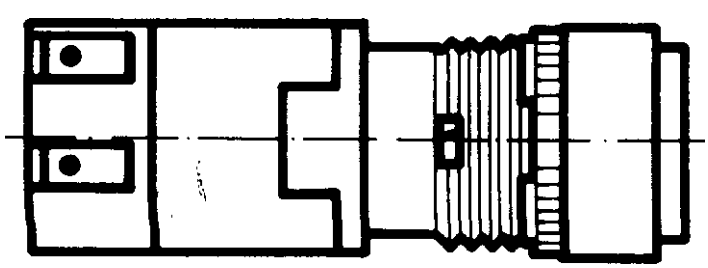

**General production with patented selector mechanism for the selection of the function impulse or latching.**

**Application: with, for example, a paper clip the wire in the window can be pushed to the right for the impulse function.**

saia-burgess

TH