6761 & 6763 ~ PCB Mounting Pressure/Vacuum Switches (slow make contacts)

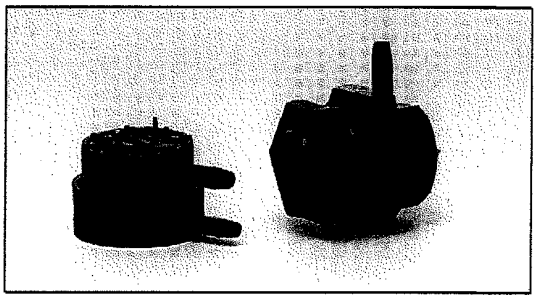

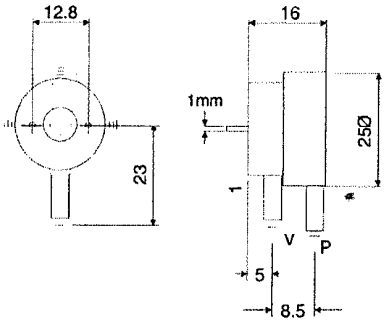

Benefits

- A range of small switches designed for direct mounting onto printed circuit boards
- UL versions available
- Various spout orientations available
- Double diaphragm versions available upon request
- Available with base or side tube entry
- Silver or gold contact options
- Switches can be factory set within specified tolerances
- 'O' ring seals available for dust and water tight applications, back entry versions only

Printed Circuit Board Mounting Switches

Model No		**6761 (Vacuum)**	**6763 (Pressure)**
Pressure/Vacuum range	Minimum	150mm (6 ins Wg)	150mm (6 ins Wg)
	Maximum	670 millibar (9.8 PSI)	1.0 Bar (14.7 PSI)
Maximum Differential		Approximately 0.06 ins WG	Approximately 0.06 ins WG
Pressure/Vacuum Range		Adjustable variants	Adjustable variants
Body Withstand Pressure		2.04 Bar (30 PSI)	2.04 Bar (30 PSI)
Air Bleed Version		Available upon request	Available upon request
Flow Rate Litre / Min (with air bleed)		8 - 30cc/Min @ 31 ins WG	8 - 30cc/Min @ 31 ins WG
Pressure Connection		4mm Ø spout for side and back entry	4mm Ø spout for side and back entry
		2mm Ø spout for back entry only	2mm Ø spout for back entry only
		Lower spout 'V' vacuum	Upper spout 'P' pressure
Connecting Tube Reference		4mm spout = 2311-01 or 2311-08	4mm spout = 2311-01 or 2311-08
		2mm spout = 2311-03	2mm spout = 2311-03
Temperature Range		-10°C to 85°C (Flow Solder 220°C for 5 Sec)	-10°C to 85°C (Flow Solder 220°C for 5 Sec)
Electrical Data			
Switch		Single Pole Normally Open	Single Pole Normally Open
Contact Rating Maximum		0.5A RES 250V ac (Silver contacts)	0.5A RES 250V ac (Silver Contacts)
UL		50mA RES 250V ac	50mA RES 250V ac
		(Maximum ratings may not be achieved at low pressure settings)	
Dry Switching Maximum Recommended Current		10mA 24V dc (UL)	10mA 24V dc (UL)
Body		Glass filled polyester	Glass filled polyester
Diaphragm		Silicone as standard	Silicone as standard
Contacts		Silver or gold plated copper pins	Silver or gold plated copper pins
Mechanical Life		1 x 10^6 cycles	1 x 10^6 cycles
Weight (grams)		8grms	8grms

6761/6763 Vacuum and Pressure Switch Range

A miniature, compact low pressure switch designed for direct fitting by solder pins to printed circuit boards. Both vacuum and pressure ports are provided making the unit ideal for differential switching. Typical applications are indicators, emergency cut-out and alarms, filter and low pressure/vacuum monitoring. The switch is made to order for specific applications, the actual operating pressures or vacuum being set during production. However, final adjustment may be made after installation by the slotted screw in the base. The body construction allows the two ports to be set at any angle to each other.

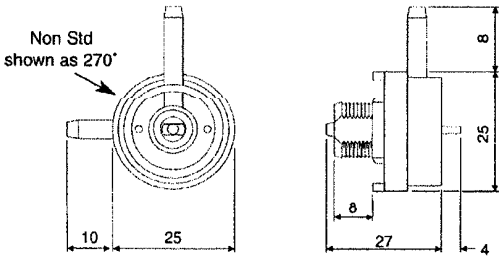

As a consequence of our policy of continual improvement, we reserve the right to change without notice any detail in this publication. Please see our Conditions of Sale.