Power Electronics

MINISTART
Smart Motorstarter, For Modbus
UG 9410

Translation of the original instructions

Modbus MEMBER

DOLD

0275365



Product Description

The smart motorstarter UG 9410 can be used for softstart, softstop, reversing and protecting 3 phase asynchronous motors. By measuring the line current a thermal model is used to calculate the motor temperature, and in the case of overtemperature the motor is disconnected. In addition also a thermo switch can be used. The reversing is done via relays. The relays are switched without current flow, this provides long service life.

Function Diagram

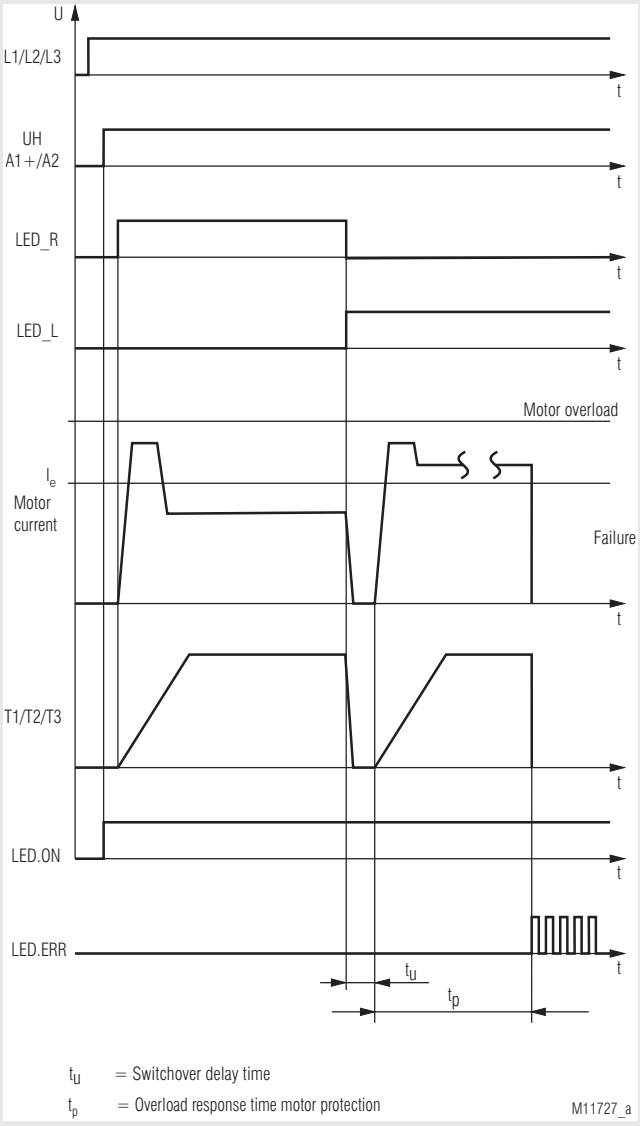

Your Advantages

- Widely used measuring and automation protocol
- Up to 7 functions in one device
  - Reversing anticlockwise,
  - Reversing clockwise
  - Softstart
  - Softstop
  - Motor protection
  - Phase sequence monitoring
  - Phase failure monitoring
  - Communication monitoring
- 80 % less space
- Simple and time-saving commissioning as well as user-friendly
- Operation through parameterization via modbus
- Hybrid relay combines benefits of relay technology with non-wearing semiconductor technology
- High availablility by
  - Temperature monitoring of semiconductors
  - High withstand voltage up to 1500 V
  - Load free relay reversing function
  - Device overload
- Pluggable clamps
- TWIN- connection terminals to loop auxiliary supply and Bus

Features

- According to IEC/EN 60947-4-2
- Modbus RTU-interface
- To reverse 3 phase motors up to 0.18 kW ... 2.2 kW at 400 V
- 2-phase softstart, softstop
- 3 potentiometer for setting the modbus adress and baud rate
- 5 LEDs for status indication
- Reversing with relays without current, softstart, softstop with thyristor
- Galvanic separation between control circuit and power circuit
- Width: 22.5 mm

Approvals and Markings

CE

Applications

- Reversing operation for door and gate controls, bridge drives and lifting applications
- Conveyor systems
- Actuating drives in process controls

Circuit Diagram

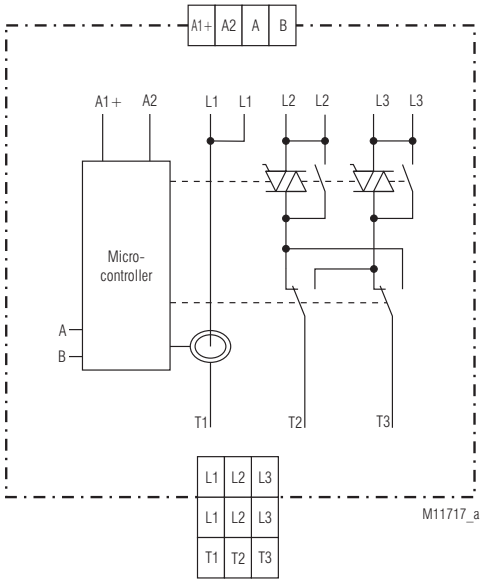

Connection Terminals

Terminal designation	Signal description
A1 (+)	Auxiliary voltage + DC 24 V
A2	Auxiliary voltage 0 V
A	Modbus signal A
B	Modbus signal B
L1	Phase voltage L1
L2	Phase voltage L2
L3	Phase voltage L3
T1	Motor connection T1
T2	Motor connection T2
T3	Motor connection T3

Function

Softstart
2 motor phases are controlled using thyristors, so that the motor current rises continuously. The starting torque behaves in the same way. This provides shock free starting and reduces mechanical failures. Starting time- and starting voltage can be adjusted via Modbus.

Softstop
2 motor phases are controlled using thyristors, so that the motor current drops continuously. The motor torque behaves in the same way on run down. This provides shock free stopping and reduces mechanical failures. Stopping time and stopping voltage can be adjusted via Modbus.

Motor protection
The thermal load of the motor is calculated using a thermal model. The current is measured in phase T3. A symmetric current load of all 3 phases of the motor is assumed for flawless functioning. When the trigger value – stored in the trigger characteristics-, is reached, the motor is switched off and the device switches to fault 8.
The fault and motor leading can be acknowledged via Modbus.

Attention: The data of the thermal model is cleared through reset. In this case, the user must provide adequate cooling time of the motor resp. of the UG 9410.

Phase sequence detection
For correct function of the unit a clockwise phase sequence is required. The phase sequence monitoring feature checks on power up the sequence of the connected voltage and signals on anticlockwise sequence the fault 3. This fault can be cleared via Modbus.

Phase failure monitoring
After connecting the auxiliary supply, the unit checks if all 3 phases are correct. If one or more phases are missing, the unit indicates fault 4. This fault can be reset via Modbus.

Communication monitoring
The communication monitoring controls the data transmission between Modbus-master and Modbus-slave using the registers "Timeout enable" and "Timeout time". It enables the Modbus-slave to switch off all outputs independently in the event of a communication failure. Further information can be found in the separate user manual Mode RTU.

Indicators

Green LED "ON": Permanent on - Supply connected

Red LED "ERR": Flashing - Failure code of the device

Yellow LED "BUS": Flashing - When receiving or transmitting Modbus data

Yellow LED "L": Permanent on - Motor turns anti-clockwise
Flashing - Softstart or softstop active on anti-clockwise turn

Yellow LED "R": Permanent on - Motor turns clockwise
Flashing - Softstart or softstop active on clockwise turn

Failure code (number of flashing pulses in quick succession):
1 - Overtemperature on semiconductors
2 - Wrong mains freqency
3 - Phase reversal detected
4 - Phase failure detected
7 - Incorrect temperature measurement circuit
8 - Motor protection has responded
9 - Modubus communication failure
10 - Checksum failure EEPROM
11 - Communication error Overrun-Error
12 - Communication error Framing-Error

Note
Error codes 11 and 12 are used to diagnose the Modbus communication. If these communication errors occur, the device does not switch to error mode (input register 30002) and the operation of the system is not affected. The motor can still be started and operated as normal. In this case, the reset command only causes the ERR LED to go out and the device error (input register 30001) to be reset.

Reset Function

By sending a reset command a reset can be operated via Modbus.

Note
If the device is in error mode (input register 30002), a reset command leads to reinitialisation. This means that no Modbus telegrams can be received for a short time.

Modbus RTU

For communication between motor controller and a supervising control the Modbus RTU protocol according to Specification V 1.1b3 is used.

Setting

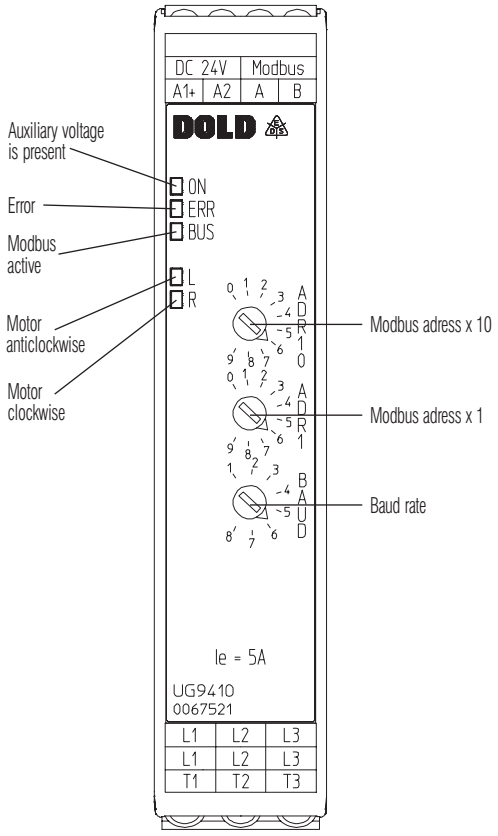

M11731_c

Position Potentiometer BAUD	1	2	3	4	5	6	7	8
Baud rate Baud	1200	2400	4800	9600	19200	38400	57600	115200
Response Time	< 50 ms	< 25 ms	< 12 ms	< 10 ms	< 5 ms	< 5 ms	< 5 ms	< 5 ms

Technical Data

Nominal voltage L1/L2/L3:	3 AC 200 ... 480 V ± 10 %	
Nominal frequency:	50 / 60 Hz, automatic detection	
Auxiliary voltage:	DC 24 V ± 10 %	
Motor power:	0.5 A ... 5.0 A adjustable via Modbus	
Operating mode		
5.0 A:	AC 53a: 6-2: 100-30	IEC/EN 60947-4-2
Surge current:	200 A (tp = 20 ms)	
Load limit integral:	200 A²s (tp = 10 ms)	
Peak reverse voltage:	1500 V	
Overvoltage limiting:	AC 510 V	
Leakage current in off state:	< 3 x 0.5 mA	
Start / deceleration voltage:	30 ... 80 % adjustable via Modbus	
Start / deceleration ramp:	0 ... 10 s adjustable via Modbus	
Consumption:	2 W	
Switchover delay time:	150 ms	
Start up delay for master tick:	Min. 25 ms	
Release delay for master tick:	Min. 30 ms	
Current measurement:	AC 0.5 ... 30 A	
Measuring accuracy:	± 5 % of end of scale value	
Measured value update time		
at 50 Hz:	100 ms	
At 60 Hz:	83 ms	
Motor protection		
up to 5.0 A:	Class 10	
Electronically, with thermal memory		
Reset:	Manual via Modbus	
Short circuit strength		
max. fuse rating:	25 A gG / gL	IEC/EN 60947-5-1

Coordination Type!
Coordination type 1 according to IEC 60947-4-1: The engine control unit is defective following a short circuit and must be replaced.

Technical Data

General Data

Operating mode:	Continuous operation	
Operation:	0 ... + 65 °C (see derating curve) At an altitude of > 1000 m the maximum permissible temperature reduces by 0.5 °C / 100 m	
Storage:	- 40 ... + 70 °C	
Relative air humidity:	93 % at 40 °C	
Altitude:	≤ 2000 m	
Clearance and creepage distances		
Rated impuls voltage / pollution degree		
Motor voltage - control voltage:	6 kV / 2	IEC 60664-1
Motor voltage - Modbus:	6 kV / 2	IEC 60664-1
Overvoltage category:	III	
EMC		
Electrostatic discharge:	8 kV (air)	IEC/EN 61000-4-2
HF-irradiation		
80 MHz ... 1.0 GHz:	10 V / m	IEC/EN 61000-4-3
1.0 GHz ... 2.5 GHz:	3 V / m	IEC/EN 61000-4-3
2.5 GHz ... 2.7 GHz:	1 V / m	IEC/EN 61000-4-3
Fast transients:	2 kV	IEC/EN 61000-4-4
Surge voltages between		
wires for power supply:	1 kV	IEC/EN 61000-4-5
Between wire and ground:	2 kV	IEC/EN 61000-4-5
HF wire guided:	10 V	IEC/EN 61000-4-6
Voltage dips		IEC/EN 61000-4-11
Interference emission		
Wire guided:	Limit value class B	IEC/EN 60947-4-2
Radio irradiation:	Limit value class B	IEC/EN 60947-4-2
Harmonics		EN 61000-3-2
Degree of protection:		
Housing:	IP 40	IEC/EN 60529
Terminals:	IP 20	IEC/EN 60529
Vibration resistance:	Amplitude 0,35 mm Frequency 10 ... 55 Hz, IEC/EN 60068-2-6	
Climate resistance:	0 / 065 / 04	IEC/EN 60068-1
Wire connection:		DIN 46228-1/-2/-3/-4
Removable terminal blocks		
Wire connection		
Phase voltage and motor pluggable screw terminal (S):	0.25 ... 2.5 mm² solid or 0.25 ... 2.5 mm² stranded ferruled	
Wire connection:		
Bus and auxiliary supply pluggable Twin-cage-clamp-terminal (PT):	0.25 ... 1.5 mm² solid or 0.25 ... 1.5 mm² stranded ferruled	
Insulation of wires or sleeve length:	8 mm	
Fixing torque:	0.5 ... 0.6 Nm	
Mounting:	DIN rail	IEC/EN 60715
Weight:	220 g	

Dimensions

Width x height x depth:	22.5 x 105 x 120.3 mm

Standard Type

UG 9410PM 3 AC 200 ... 480 V 50/60 Hz 5.0 A

Article number:	0067521
• Nominal voltage:	3 AC 200 ... 480 V
• Nominal motor current:	5.0 A
• Modbus RTU	
• Adjustable baud rate	
• Width:	22.5 mm

Characteristics

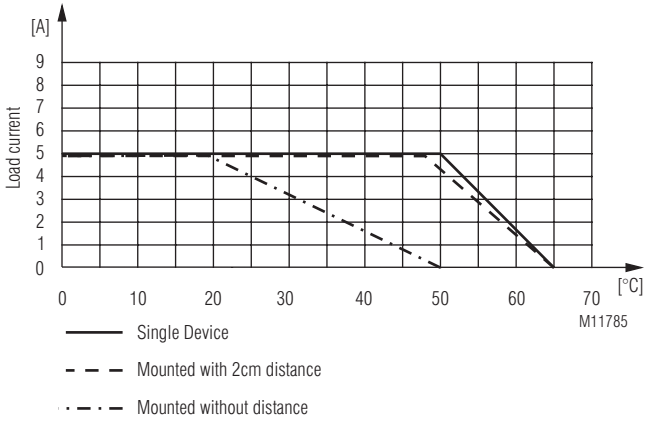

Derating curve:
Rated continuous current depending on ambient temperature and distance
Enclosure without ventilation slots

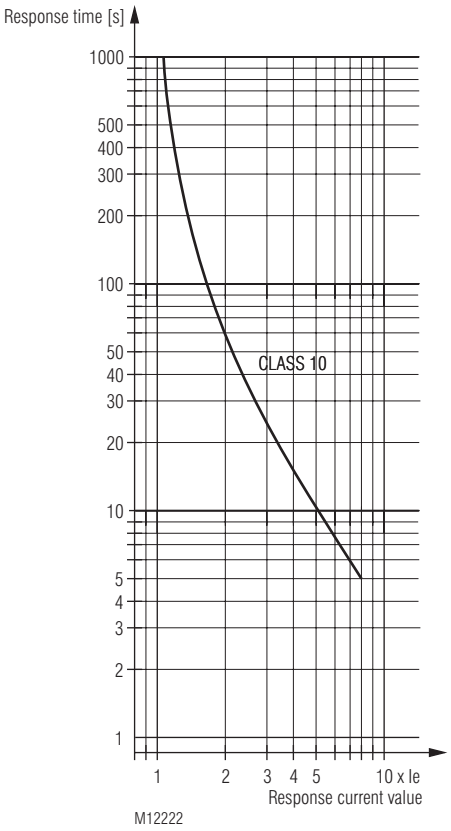

Trigger characteristics
Motor overload protection

Setting Facilities

Potentiometer ADR10: - Unit adress x 10

Potentiometer ADR1: - Unit adress x 1

Potentiometer BAUD: - Baud rate

The module address and baud rate is only read after connecting the auxiliary supply!

Group fusing

Several motor starters can be wired in parallel on the supply side. Please make sure, that the total current cannot exceed 16 A. If several starters are use together and require more than 16 A, groups have to be split up for max 16 A.

Set-up Procedure

1. Connect motor and device according to application example. The 3 phases must be connected in correct sequence, wrong phase sequence will lead to failure (see failure code).
2. Setting unit adress and baud rate via potentiometer.
3. Power up the unit.
4. Parametrization via Modbus.
5. At correct setting, the motor should ramp up continuously to full speed.

Safety Notes

Installation Error!

- For engine control units, the minimum loads indicated in the data sheet must be observed.
- The use of capacitive loads can lead to the destruction of switching components of the motor control unit. Do not operate capacitive loads on the motor control unit.
- To ensure that the motor is switched off if the Modbus communication fails, the communication must be monitored using the time-out function.

Although the motor is at standstill, it is not galvanically separated from the mains.

WARNING **Functional error!**
Danger to life, risk of serious injuries or property damage.

- It must be ensured that the motor start signal is removed before the reset, otherwise the motor will start again.

Application Example

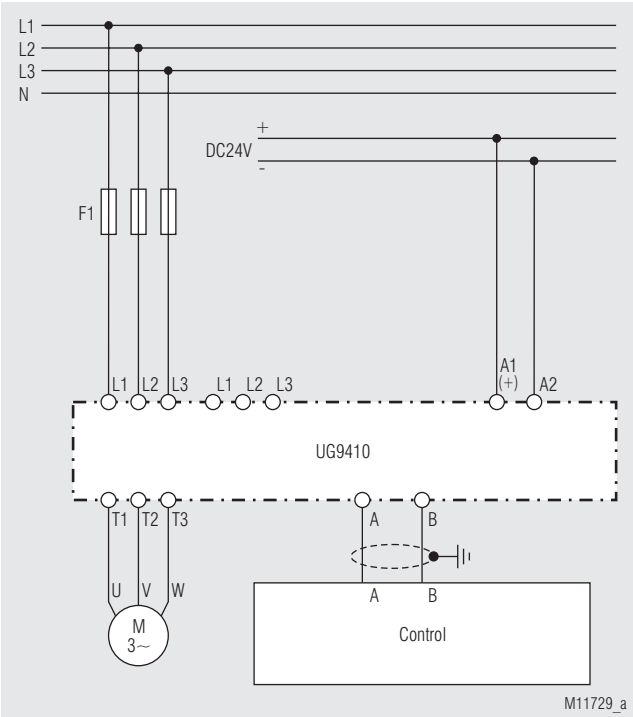

Motor control with UG 9410 and PLC via Modbus

Bus Interface

Protocol	Modbus Seriell RTU
Adress	1 to 99
Baud rate	1200, 2400, 4800, 9600, 19200, 38400, 57600, 115200 Baud
Data bit	8
Stop bit	2
Parity	None

More information about the interface, wiring rules, device identification and communication monitoring can be found in the Modbus user manual.

Function-Codes

At UG 9410 the following function codes are implemented:

Function-Code	Name	Description
0x03	Read Holding Register	Device parameter read word by word
0x04	Read Input Register	Actual values read word by word
0x05	Write Single Coil	Outputs write induvidually
0x06	Write Single Register	Device parameter write word by word
0x10	Write Multiple Register	Device parameter write in blocks

Device configuration

If required the device configuration data can be saved permanently by setting the the Bit "Write configuration to EEPROM". The data is copied from the EEPROM to the relevant register when connecting the auxiliary voltage. As the numbers of write cycles of an EEPROM are limited, the writing must not be done in cycles. In addition it is not possible to receive modbus telegrams during a period of 50 ms while writing the EEPROM.

Parameter table

Every slave owns an output- configuration- and actual value table. In these tables it is defined under which address the parameters can be found.

Single Coils (Control signals):

Register-Adress	Protocol-Adresse	Name	Value range	Description	Data type	Access rights
1	0	RunRight	0x0000 0xFF00	Motor turns right off Motor turns right on	BIT	Write
2	1	RunLeft	0x0000 0xFF00	Motor turns left off Motor turns left on	BIT	Write
3	2	Reset	0x0000 0xFF00	No function Device reset	BIT	Write
4	3	Write configuration to EEPROM	0x0000 0xFF00	No function Save parameter	BIT	Write

Input Register (Device state and measuring values):

Register-Adress	Protocol-Adresse	Name	Value range	Description	Data type	Access rights
30001	0	State word 1 Device failure	0 … 10	0: No failure 1: Overtemperature LT 2: Wrong freqency 3: Phase reversal 4: Phase failure 7: Temperatur circuit fault 8: Motor protection device actuated 9: Communication fault Modbus 10: Checksum failure EEPROM 11: Communication error Overrun-Error 12: Communication error Framing-Error	UINT16	Reading
30002	1	State word 2 State of device	0 … 6	0: Device initialize 1: Wait for start 2: Softstart ramp 3: Clockwise On 4: Anti-clockwise On 5: Softstop ramp 6: Device in errormode	UINT16	Reading
30003	2	Actual motor current	0 … 3000	Actual motor current in 1/100 A	UINT16	Reading
30004	3	Motor load	0 … 100	Motor load in % from rated motor power	UINT16	Reading

Holding Register (Device configuration):

Register-Adress	Protocol-Adresse	Name	Value range	Initial value	Description	Data type	Access rights
40001	0	Control word 1	0 … 2	0	Bit 0 = Reset Bit 1 = Write configuration to EEPROM	UINT16	Write / reading
40002	1	Control word 2	0 … 2	0	Bit 0 = RunRight Bit 1 = RunLeft	UINT16	Write / reading
40003	2	Ie *)	50 … 500	50	Nominal motor current in 1/100 A	UINT16	Write / reading
40004	3	Mon *)	30 … 80	30	Softstart voltage in % from nominal voltage	UINT16	Write / reading
40005	4	Ton *)	0 … 100	100	Softstart ramp time in 1/10 Sec	UINT16	Write / reading
40006	5	Moff *)	80 … 30	30	Softstop voltage in % from nominal voltage	UINT16	Write / reading
40007	6	Toff *)	0 … 100	100	Softstop ramp time in 1/10 s	UINT16	Write / reading
40008	7	Timeout release	0 … 1	0	0 = Disable 1 = Enable	UINT16	Write / reading
40009	8	Timeout	1000 …10000	1000	Timeout value in ms	UINT16	Write / reading

*) Parameters can be stored permanently in the EEPROM by setting the Bit "Write configuration to EEPROM"