unimec 16300/16700/16800



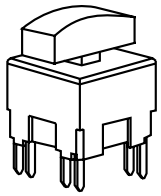

Technical Data:

- 250mA/120V/9W AC/6W DC
- 2 pole
- momentary or alternate
- 8 contact functions
- temperature range:
  low temp: -40/+75ºC
  high temp: -40/+160ºC
- through-hole version

Dimensions 16300:

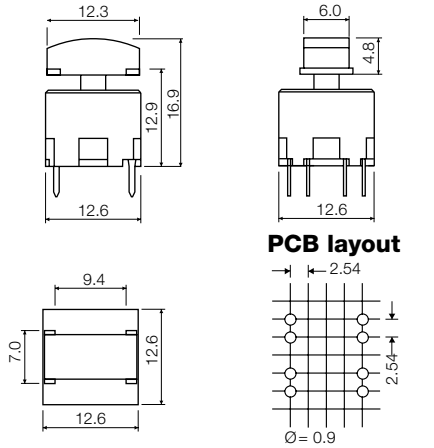

Dimensions 16700:

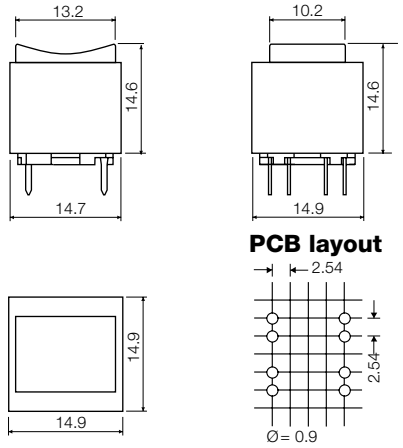

Dimensions 16800:

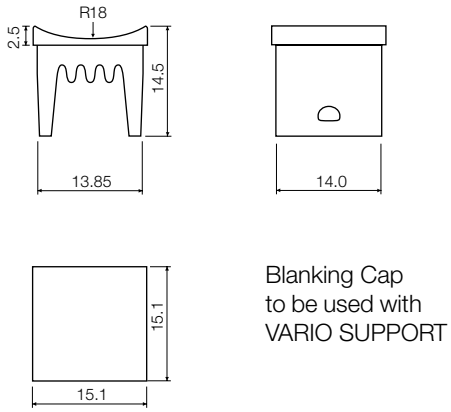

Blanking Cap
to be used with
VARIO SUPPORT

HOW TO ORDER

1 5 + **1 6 3 0 0**



Switch
15501 mom. silver
15551 alt. silver
15502 mom. gold
15552 alt. gold
15500 silent silver
15401 mom. silver high temp.
15451 alt. silver high temp.

Cap



00 blue
01 brown
02 green
03 grey
04 yellow
05 golden
06 white
07 orange
08 red
09 black

30 ultra blue
40 dusty blue
42 aqua blue
32 mint green
33 tele grey
34 melon
38 noble red

50 metal dark blue
53 metal light grey
57 metal dark grey
58 metal bordeaux

1 5 + **1 6 7 0 0**

Switch



Cap



00 blue
02 green
03 grey
04 yellow
06 white
08 red
09 black

1 6 8 0 0

Blanking Cap



00 blue
01 brown
02 green
03 grey
04 yellow
05 golden
06 white
07 orange
08 red
09 black

11 transparent
12 transparent green
14 transparent yellow
18 transparent red

Ordering example: 15551 + 1670009

mec · Industriparken 23 · P.o. Box 26 · DK-2750 Ballerup · Denmark
Tel.: +45 44 97 33 66 · Fax: +45 44 68 15 14 · Web: www.mec.dk. · E-mail: danmec@mec.dk

mec a/s jan. 2003