HK 2210

Dimensions

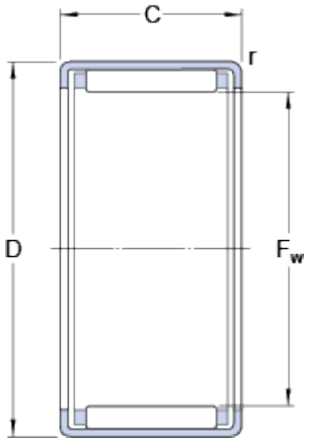

F_w		22	mm
D		28	mm
C		10	mm
r	min.	0.8	mm

Calculation data

Basic dynamic load rating	C	7.2	kN
Basic static load rating	C_0	10.6	kN
Fatigue load limit	P_u	1.2	kN
Reference speed		11000	r/min
Limiting speed		12000	r/min

Mass

Mass bearing	0.013	kg

Appropriate products

Radial shaft seal with a low cross-sectional height, single lip	G 22x28x4
Radial shaft seal with a low cross-sectional height, double lip	SD 22x28x4