# Bourdon Tube Pressure Gauges, Stainless Steel
# Type 23X.50
# Item no.: 48774424

| Description | |
|---|---|
| Design | EN 837-1 |
| Nominal size | 100 mm |
| Accuracy class | class 1.0 |
| Scale range | 0...10 bar |
| Unit of outer Scale | bar |
| Process connection | G 1/2 B |
| Connector location | lower mount |
| **Materials** | |
| Measuring system | stainless steel |
| Movement | |
| Dial | Aluminum, white |
| Pointer | aluminium, black |
| Case material | Stainless steel 1.4301 |
| Window | laminated safety glass |
| Bezel ring | cam ring (bayonet type), stainless steel |
| Case filling fluid | glycerine |
| **Operating conditions** | |
| Permissible medium temperature | + 100 °C |
| Permissible ambient temperature | -20 ... +60 °C |
| | |
| Ingress protection | IP 65 |

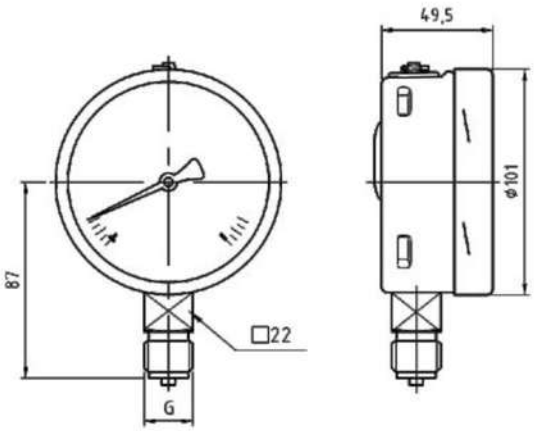




WIKA Instruments – 38 Avenue du Gros Chêne – 95220 HERBLAY
Phone0 820 95 10 10
info_fr@wika.com • http://www.wika.fr