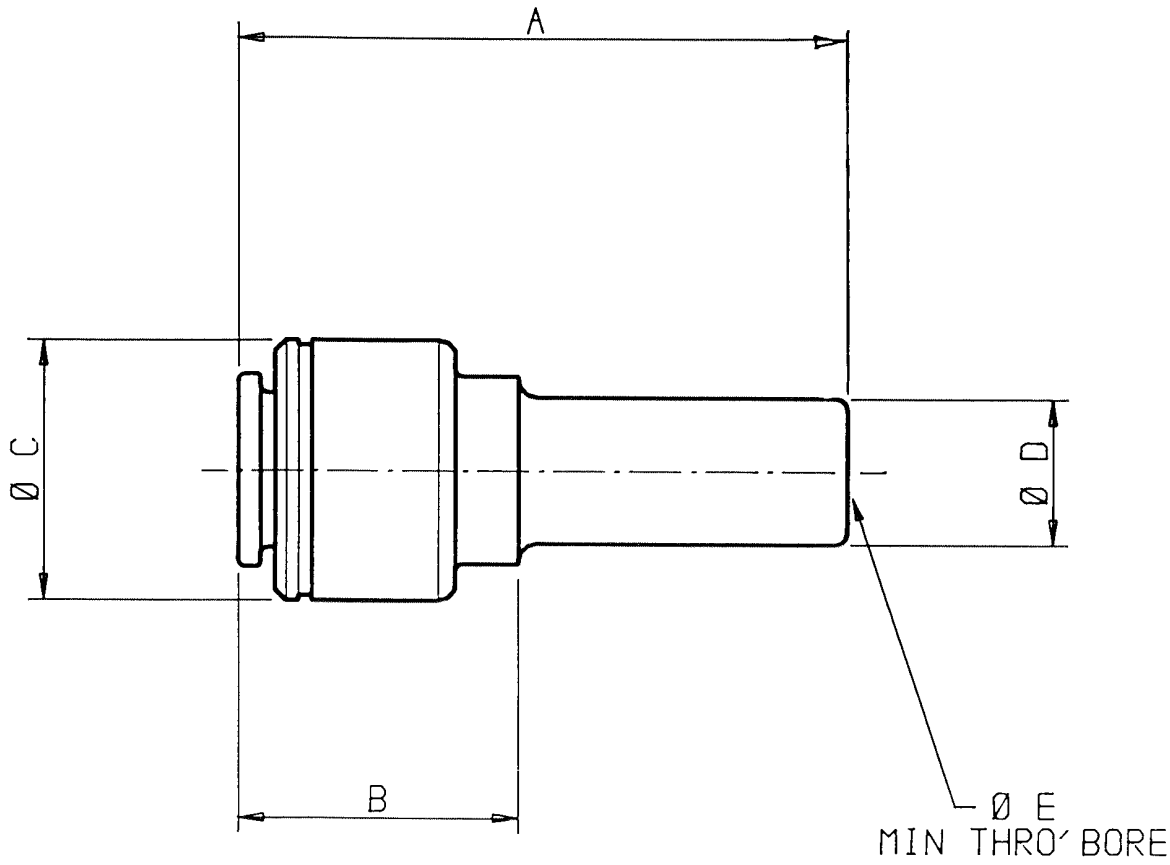

PRODUCT NO.	DESCRIPTION	A	B	Ø C	Ø D	Ø E
PM060504E	5MM STEM-4MM TUBE O.D.	35	18	13	5	2.5
PM060604E	6MM STEM-4MM TUBE O.D.	36	18	13	6	2.5
PM060605E	6MM STEM-5MM TUBE O.D.	36	18	13	6	3.5
PM060804E	8MM STEM-4MM TUBE O.D.	37	18	13	8	3.5
PM060805E	8MM STEM-5MM TUBE O.D.	37	18	13	8	4.0
PM060806E	8MM STEM-6MM TUBE O.D.	37	18	15	8	5.0
PM061006E	10MM STEM-6MM TUBE O.D.	40	18	15	10	5.0
PM061008E	10MM STEM-8MM TUBE O.D.	40	18	18	10	6.0
PM061208E	12MM STEM-8MM TUBE O.D.	46	19	18	12	6.0
PM061210E	12MM STEM-10MM TUBE O.D.	50	23	20	12	7.4
PM061510E	15MM STEM-10MM TUBE O.D.	56	23	20	15	7.4
PM061512E	15MM STEM-12MM TUBE O.D.	61	28	23	15	9.0

ALL DIMENSIONS IN MM

RELEASE No. 88PD12-02-014

John Guest

THE COPYRIGHT HEREIN BELONGS TO JOHN GUEST LIMITED. THE INFORMATION GIVEN MUST NOT BE REPRODUCED WITHOUT WRITTEN CONSENT. © 1988

PRODUCT DATA SHEET DS-138

TITLE REDUCERS (P RANGE)

ISSUE 3

DATE 07/12/88

Location: CCL-SA-SPE01
Release Number: 000000-C-FILX
CURRENT PRODUCTION
User: roses
Printed/Downloaded: 3 Mar 10,14:05
UNCONTROLLED IF PRINTED OR DOWNLOADED